TABLE OF CONTENTS

PFC Program Background, Philosophy and Success 2
Valuing Diversity and Cultural Responsiveness 9
Community Linkages and Coalition-building 15
Community-based Needs Assessment 21
Planning 33
Incorporation/Restructuring 39
Public Relations 43
Managing Change 61
Evaluation 67
Successful Local Program Elements 73
Conclusion 75
Bibliography 76
Appendix A (PFC Trainers, Guest Trainers and Consultants) 80
Appendix B (PFC Libraries and Participants) 81

PARTNERSHIPS FOR CHANGE
PROGRAM BACKGROUND, PHILOSOPHY AND SUCCESS

California's population has changed dramatically in the last 30 years. Within a single generation, California has become the country's most ethnically diverse and complex society. In 1970, just 22 percent of Californians were American Indian, Asian/Pacific Islander, African American, or Hispanic. By 1990, those four ethnic groups had grown to 43 percent of California's total population, and 52 percent of the state's school-age population. This trend becomes even more pronounced in the 21st century. By 2040, these four ethnic groups will comprise 68 percent of California's population. This poses a challenge to all public service organizations, and certainly to public, school and academic libraries.

The public library's mission, indeed, is a broad one: equality of opportunity and service for all. When populations shifted dramatically in many of California's communities, most service agencies were simply not ready to serve the emerging populations. California public libraries' attempts to achieve their mission of service for all are influenced by a litany of factors over which they have had little control. For example, serious cutbacks have been made in the budgets of most public libraries since 1978 when Proposition 13 was passed.

BY THE LATE 1980s, TRADITIONAL LIBRARY SERVICE PATTERNS WERE NO LONGER RESPONSIVE IN MANY CALIFORNIA COMMUNITIES.

As a result, library funding was cut by as much as 50 percent in many cities and counties. During these years, libraries, like all public agencies, have had to cope with shrinking revenues and a reluctance among some voters to approve tax increases. Other factors affecting library services are driven by change: the state's roller-coaster economy, its exploding technology, its social values, its growing population, and its rapidly changing demographics.

In 1987, the California State Library commissioned the Rand Corporation to complete a study for the 1988 State of Change Conference. The study, "Public Libraries Face California's Ethnic and Racial Diversity," identified five major obstacles that appear to hamper the attempts of public libraries to adapt their services and collections to their community's changing needs:

1. Libraries play many roles for their users, but these roles are rarely explicitly defined or ranked in order of importance.
2. Even when libraries decide to adapt, the change process is difficult, and libraries sometimes do not know what or how to change.
3. Many libraries have no major new resources to help them change.
4. Some of the materials and expertise needed for adaptation are scarce.
5. It is difficult to measure whether a library has adapted successfully.

In May 1988, the California State Library funded a statewide conference, "A State of Change: California's Ethnic Future and Libraries," to examine the need for new policies and programs to respond to California's growing diversity. The State Library used the information, thinking and energy generated by the conference to spearhead the Partnerships for Change (PFC) Program.

Funded from 1988 to 1995, PFC was a call for creative and long-term commitments to serve the information needs of all Californians. PFC led the way in developing imaginative library service programs and new community partnerships. PFC libraries conducted community-based needs assessment, forged community coalitions, expanded their collections, restructured their services and experimented with

culturally responsive public relations to better serve their changing populations.

THE PFC PHILOSOPHY

The PFC Program was designed to help libraries overcome such obstacles so they could restructure their plans for library service and reallocate their resources. The program focused on helping community library staff to reach out to their changing community populations, better understand them and their information needs, and then restructure their plans for library service to best meet those needs.

By the late 1980s, traditional library service patterns were no longer responsive in many California communities. Changing populations had information needs that were different from many of those traditionally supported by the library. For California's libraries to be relevant information resources, new service programs would be needed. This did not mean that traditional library services had no role, but they were no longer effective in communities where demographic changes had occurred.

In searching for a model of effective organizational change, the California State Library reviewed the many decades of successful and less successful programs funded with Library Services and Construction Act (LSCA) monies, discovering that libraries, library staff, and the customers they serve must be aligned in a partnership. State Library staff also felt that libraries must be prepared for and committed to fundamental organizational change and restructuring in order to develop services and programs that are most responsive to the needs of their communities.

In developing the PFC philosophy, several library staff needs were identified:

- to learn about the people they are trying to serve: their traditions, history and culture; their values; their information/recreation needs; their preferred means of obtaining information; and their perceptions of public libraries;
- to learn about community structures by spending time in the community and interacting with its members;
- to develop ongoing links to maintain their knowledge of the community;
- to build coalitions with a variety of organizations, agencies, groups and businesses which also serve the community; and
- to continue the process of change through training, community-based needs assessment and analysis and restructuring of current plans of service.

PFC MISSION AND GOALS

The PFC Program mission was to assist California libraries in analyzing and restructuring their library service programs and policies to respond to the ethnic and cultural diversity of their communities. To accomplish this, PFC provided participating libraries with a community-based process for program revision, a training program, specialized support services, public relations programs and LSCA funds to help them through the process. The California State Library's vision for the PFC program included five goals:

1. a revised community library service program that responds to the needs of the library's American Indian, Asian/Pacific Islander, African American and Hispanic populations;
2. analysis and revision of library policies to provide the best jurisdictional support for the revisions;
3. an ongoing pattern of active staff involvement in the community, and of active community involvement with the library in developing, revising and maintaining the program;
4. systematic incorporation of the revised service program into the library's baseline budget; and
5. a change process that is both humane and ongoing.

"As our community changes, we're trying to continue what we learned from PFC because it works."

BASIS FOR THE PFC DESIGN

In planning the PFC Program, State Library staff considered many "realities" that could impact the changes sought. They ascertained that any program which will result in responsive and lasting change must:

- focus primarily at the community level (i.e., the program must be based on client needs);
- help library service staff interact with their diverse communities;

"I use the PFC principles every day in library personnel administration as well as planning for new services."

- ensure that service program design is based on interaction with the community to determine the specific information needs of that community;
- allow for a multitude of possible changes and accept that a range of different changes may be needed for different libraries;
- help library staff understand and accept that many traditional library approaches may be less relevant and less appropriate to serving the needs of diverse populations;
- help library staff recognize that, while changes in attitudes, skills, traditional services and delivery mechanisms are expected, PFC will not change basic library service values and goals (i.e., provide information and recreation to the population the library serves);
- recognize that new library service delivery mechanisms may need to replace or supersede existing physical facilities and approaches;
- recognize that different libraries and staff will enter the program at many different places on a range of attitude, skills, experience, and past focus on this issue;
- recognize that not all libraries and staff will be accurate in their assessment of their actual place in the range;
- include an element which will foster new staff attitudes and program-design skills that reflect a higher level of awareness and appreciation for California's multicultural society;
- recognize that for many library staff, the scope of change needed is similar to that caused by large automation efforts in libraries, and it will take an equal effort to retool in this area as well; and
- understand that any change is hard on people and that the magnitude of change required may be substantial.

Finally, State Library staff believed the PFC Program's financial and technical assistance should continue over several years if the changes in attitudes, skills and service programs were to be really long-lasting. But they also understood that outside financial and technical assistance must have a clear end point, requiring PFC libraries to incorporate new program funding into their baseline budget.

THE EIGHT KEY PRINCIPLES OF THE PFC PHILOSOPHY

Partnerships for Change emphasized eight key principles as integral to transforming an organization in providing the most effective service to a library's community. These key principles are: Valuing Diversity and Cultural Responsiveness; Community Linkages; Community-based Needs Assessment; Planning; Incorporation and Restructuring; Public Relations; Managing Change; and Evaluation. The following chapters of this manual focus on each of these topics.

THE A, B, AND C PARTNERSHIP

In creating the most conducive environment for systemic, ongoing, and evolutionary change, the California State Library recommended a multi-layered partnership, a team made up of a Library Administrator (A Partner), a Branch Manager (B Partner), and a Community Partner (C Partner). This A, B, and C partnership formed the foundation of all Partnerships for Change activities. Together, the A, B, and C Partners strategized and planned needs assessment activities, public programming and service, outreach and publicity, coalition and community involvement, staff training, and restructuring of the library organization to incorporate PFC philosophy and goals. Each team developed a community coalition of individuals and organizations designed to provide input and recommendations on all PFC activities. All partners were valued equally and their roles were essential for true success in the PFC model.

The Administrative Partner provided the necessary commitment, support and leadership from library administration. The A Partner also furnished access, influence, attention, security, facilitation, strategies, and reinforcement. Oftentimes, this partner was the library director or another key library manager.

The Branch Partner provided the link between the library and the community. The B Partner also provided a respected community presence, immediate response, credibility and community trust, cohesion, awareness, and service development, implementation and maintenance. Oftentimes, this partner was the branch manager or another front-line librarian.

The Community Partner represented the community voice in the model. The C Partner also provided connections, insight, knowledge and information about community resources, links to neighborhood leadership and advocacy, and was instrumental in coalition development. This partner was often a member of the target community and had bilingual skills.

In the 1999 Survey of PFC Participants, one partner reflected:

> *"The requirement of Administrative, Branch and Community partners led to the success of our PFC endeavors and adoption of the PFC philosophy throughout the library."*

A BLUEPRINT FOR SUCCESS

The A, B, and C Partnership is not a prescriptive formula. It is a recommendation for including all levels of staff and community collaborations to create the most conducive environment for sustaining progressive change. Although the Partnerships for Change program focused on California's ethnic populations, the model of a team of library leaders and community members using the PFC principles can successfully enhance library service to any segment of the community.

Together, the partners were able to provide the leadership, support, resources, and stability necessary to make each program a model of success. PFC philosophy was incorporated in the libraries' long range plans, mission statements, policies and procedures, annual goals and objectives. Resources were allocated for staff training in valuing diversity, language learning, leadership development, public relations and other key areas. The communities took ownership of their libraries and became champions of literacy, services, access, and the development of resources to ensure the library's future.

WHO WERE THE PARTNERSHIPS FOR CHANGE LIBRARIES?

The California State Library devoted Library Services and Construction Act monies to two overlapping rounds of PFC programs.

Cycle I libraries and their focus included:

- Contra Costa County Library, Pinole Branch • *Filipino*
- Fresno County Library, Auberry Branch • *American Indian*
- Fullerton, Main • *Hispanic*
- Long Beach Public Library, Mark Twain Branch • *Cambodian*
- Los Angeles Public Library, Echo Park Branch • *Hispanic*
- Los Angeles Public Library, Pio Pico Koreatown Branch • *Korean*
- Los Angeles Public Library, Watts Branch • *African American and Hispanic*
- Mendocino County Library • *American Indian*
- Monterey County Library • *Hispanic*
- Oceanside Public Library, Main • *Hispanic*
- Orange Public Library, Main • *Hispanic*
- Riverside City and County Public Library • *Hispanic*
- San Diego Public Library, Linda Vista Branch • *Vietnamese, Hmong and Laotian*
- San Diego Public Library, Logan Heights Branch • *Hispanic*
- San Francisco Public Library, Mission Branch • *Chinese and Hispanic*
- San Jose Public Library, Indian Center • *American Indian*
- Santa Ana Public Library, Newhope Branch • *Vietnamese*

Cycle II libraries and their focus included:

- Alameda County Library, Union City Branch • *Hispanic*
- Berkeley Public Library, South Branch • *Chinese, Vietnamese, Japanese and African American*
- Carlsbad City Library, Main • *Hispanic*
- Kern County Library, Lamont Branch • *Hispanic*
- Los Angeles Public Library, Central • *Hispanic*
- Stockton-San Joaquin County Public Library, Southeast Branch • *Hispanic*
- Sunnyvale Public Library, Main • *Hispanic*
- Whittier Public Library, Main • *Hispanic*

EVALUATION OF PFC PROGRAMS

The impact and effectiveness of the PFC Program are the true measures of whether or not the program succeeded in helping libraries restructure their service programs to respond to their communities' diversity. The Evaluation and Training Institute conducted the formal evaluations of the PFC Program from 1990 to 1995. Their review and assessment of the extent to which each of the five PFC goals was achieved indicates that, by and large, the PFC Program was successful.

"In getting to know our community, PFC helps remind me why I became a librarian."

Goal 1: A revised community library service program that is responsive to the needs of the library's targeted American Indian, Asian/Pacific Islander, African American, and Hispanic populations.

Clearly the PFC effort succeeded in revising library services to respond to the needs of the targeted community. In *every* local PFC Program, some revision of library service was implemented that directly addressed community needs. These changes ranged in scope from the simple translation of library card applications into non-English languages, to staff training in valuing diversity, to bookmobile services for previously unserved agricultural workers, to after-school tutoring, to the sponsorship of citizenship workshops. At some level, *all* PFC libraries successfully revised some component of their service program.

Goal 2: The analysis and revision, as necessary, of library policies in order to provide the best jurisdictional support for the library service program revisions.

Generally speaking, the local PFC programs succeeded in analyzing and revising some local library policies and practices to support service program revisions. Such revisions included changing library mission statements to incorporate the PFC philosophy, modifying policies for fines and fees, altering cataloging procedures, modifying hiring practices, and changing hours to be more responsive to community use. As reported by one participant,

> *"The library has completely adopted the PFC philosophy. PFC is not just a one-time grant, but a part of library operations from now on."*

However, truly important library policies and practices, such as mandating staff time in the community as part of the job requirement, were not changed. In many libraries, the perception continues that "if you're doing community outreach, and you're not behind a public service desk, then you're not doing your job." More importantly, local and state budget restraints have negatively impacted the PFC libraries' ability to focus their attention on program revision while concentrating their efforts on simple library survival. Although the fundamental principle of the PFC Program targeted a restructuring and reallocating process for existing resources regardless of the fiscal climate, the progress of PFC programs must be viewed in the context of the drastic fiscal crisis and California economic recession of the early 1990s. In response to devastating budget cuts, most local PFC libraries continued to reallocate resources in traditional ways. To this end, some PFC programs were not as successful in providing on-going jurisdictional support (or restructuring existing budgets).

Goal 3: An ongoing pattern of active library staff involvement in the community and of active community involvement in the development, revision and maintenance of the library's service program.

The PFC effort engendered within library staff a holistic, consciousness-raising approach to changing how libraries work with their communities. The needs assessment process and the formation of community coalitions to guide library changes, supported the involvement of the library in the community, and vice versa. According to one participant,

> *"PFC forced us to look at library services from the point of view of the community we serve, not simply from our perspective of what we believe the community needs."*

As noted by another participant,

> *"Without PFC we wouldn't have had the motivation to get out in the community. Probably the only thing we would have done would have been small additions to our collection."*

In some instances, PFC libraries were already aware of the need for change to serve community needs. The PFC effort served to empower and validate activities related to managing change and responding to community needs. However, ongoing community involvement has been difficult to maintain over the course of the PFC Program. After initial input by the community,

many of the community linkages and activities did not continue to the same degree. In fact, it was non-threatening community activities, such as participation in local community fairs and festivals, which continued over time. Moreover, the initial community coalitions served more often as pro-forma bodies, simply validating the decisions of library staff in service program design changes instead of initiating such changes from the perspective of the local community.

Goal 4: A revised service program supported within the library's baseline budget.

In spite of some successes, many of the PFC programs failed to fully incorporate the revised service programs into their library's on-going budgets. While PFC libraries revised service programs to meet community needs to some degree, they were not as successful in maintaining such changes in their baseline budgets. Some notable exceptions included programs where existing library budgets were restructured to support outreach staff and/or targeted collection development staff, or jurisdictions in which all library services were reduced equally in response to decreasing budgets, rather than completely eliminating specific budget items (for example, cutting all collection development funds by 20 percent rather than simply eliminating the funds for non-English materials). Some libraries, even if they did not change their baseline budgets, at least recognized the importance of non-English language collections in their collection development policies.

In the 1999 Survey of PFC Participants, in response to the question, "In your opinion, has the PFC philosophy been incorporated into your library's service plan?" 47 percent responded, "Yes, absolutely," while 36 percent responded, "To some degree." Fifteen percent of respondents provided no answer to this question.

Goal 5: A change process that is both humane and ongoing.

For the most part, the PFC Program embodied a change process that was both humane and ongoing in scope. The statewide training sessions included much information on the difficulty of change, and the importance of fostering library staff attitudes, behavior and skills to reflect a higher level of awareness of and appreciation for California's multicultural society. Some libraries increased staff members' communication skills by enrolling them in language instruction classes. Local PFC programs were encouraged to implement service design changes in a sympathetic and kind manner, and to institutionalize the option of ongoing change as part of "regular" library operations. As stated by one community partner,

> *"The staff at our library have been very open and have realized the need for more sensitivity. None of the PFC staff were hesitant to challenge old notions."*

IMPLEMENTING LONG-LASTING CHANGE

By and large, Partnerships for Change achieved its goals. It successfully helped public libraries implement real, long-lasting change in how they serve their communities–and more importantly, how they evaluate current services, and plan for the future. Despite the fiscal crisis that many public library jurisdictions faced in the early 1990s when libraries cut hours, staff, collection budgets, outreach and more, PFC programs continued to operate as designed. In turbulent financial times, PFC library staffs clung to their missions of serving formerly under-served populations. PFC participants held fast to their goals because they had:

- needs assessment data to back them up;
- a three-person team and a plan;
- solid relationships with people and organizations in the community; and
- financial backing in the form of Library Services and Construction Act grants.

Today, many PFC principles–planning, needs assessment, valuing diversity/cultural awareness, community linkages, public relations, evaluation–have been incorporated into how California public libraries plan for their futures. Even federal and foundation funders consider PFC processes such as needs assessment, community linkages, public relations and evaluation to be key elements of successful grant proposals.

The goal of PFC is for every Californian–regardless of culture or ethnicity, language spoken, age, or library experience–to be able to find in the library the basic information

they need to reach their full potential. Following the PFC philosophy and experiencing the PFC process means experiencing a lot of change. PFC will change your library, your skill and experience level, and you. And you'll have a chance to become an even better librarian.

The Partnerships for Change model is one that works. It is a sensible, practical program that is effective, even in times of economic hardship. We hope that you will use this manual as a guide in designing a PFC Program that caters to the particular needs and culture of your library and community. Partnerships for Change has made a profound impact on the professional and personal lives of tens of thousands of Californians. You will be pleasantly surprised to see how Partnerships for Change can make an invaluable difference in your library.

VALUING DIVERSITY AND CULTURAL RESPONSIVENESS

The United States population is rapidly becoming an ethnically diverse population. Libraries have the choice of addressing this inevitable diversity or maintaining the "status quo" that will eventually lead them to serve only a relatively limited portion of the populace in their surrounding communities.

These demographic changes also affect the work force available. As the competition for talented personnel becomes more keen, libraries must learn to recruit, employ, manage, and retain individuals from culturally diverse backgrounds. According to the Population Reference Bureau, Asians, African Americans and Hispanics will make up 25 percent of the United States consumer base by 2000. Culturally responsive programs can only enhance an organization's services to diverse clientele. The use of a culturally diverse work force makes sense not only from a human resources perspective but also from a marketing perspective because people tend to use services provided by those who are familar to them.

CULTURE IS A DYNAMIC PROCESS THAT IS ALWAYS CHANGING.

Cultural misunderstandings and discriminatory promotion practices cause friction between ethnic groups. This reduces productivity and worker satisfaction in any organization. When the contributions of library employees from all cultural backgrounds are truly valued, and training and promotional opportunities are provided, the library can minimize the problems of absenteeism, poor performance, equal opportunity litigation, poor customer service, and staff turnover, all of which have plagued other organizations, as well as libraries.

Valuing diversity produces many benefits including less stress in the working environment. Inter-group conflicts can create a great amount of job-related stress for all those involved– administrators, managers, subordinates, and peers. Job stress is a major factor in staff burn-out, turnover, absenteeism, workers' compensation claims, and poor productivity. Effective cross-cultural communication can simply help create a more enjoyable work environment for everyone.

One important benefit often overlooked is the enhancement of personal experiences that result from working with people from diverse cultures. As people come to value individual differences, they find other people more enjoyable and, in turn, are more likely to be appreciated by others. The challenge of working with diversity also helps people learn how to expand their social and working skills, further enhancing their own value in the job market.

This chapter includes vital and practical information on defining and examining culture and its role in the workplace. It provides sections on understanding cultural perspectives, communicating effectively across cultures and avoiding costly misunderstandings, types of resistance to cultural diversity, and cultural differences revealed through language.

A culturally responsive organization is one that is sensitive to the changing needs of its work force and the community it serves, and is motivated to change its practices to meet those needs. A culturally responsive organization and its staff are more flexible and visionary and, consequently, tend to be more successful and fiscally responsible. A carefully planned strategic approach that values diversity and embraces change produces a much more responsive and effective organization. Cultural responsiveness and valuing diversity are key ingredients to success.

WHAT IS CULTURE?

Culture is a shared lifestyle consisting of values, norms, and roles which are functional and habitual. Culture is a dynamic process that is always changing. These changes reflect the ways a

group or community must adapt to its environment. Culture reflects adaptation. Two questions a library should consider: What are the adaptive tasks for the community? Are library services hindering or facilitating the completion of these tasks?

UNDERSTANDING CULTURAL PERSPECTIVES

Working in a library with culturally mixed patrons and staff is a challenge that requires sensitivity and vulnerability. Because of the potential for mixed signals, suspicion, and misunderstanding, it is important that care be given to how this interaction is to be structured. It is important to acknowledge some broad generalizations that may prove helpful when working with various cultures.

COMMUNICATION IS THE FOUNDATION OF ALL RELATIONSHIPS.

- Avoid the tendency to group all cultures together or view them as the same.
- Stress cultural pluralities and celebrate diversity.
- Watch for stereotyping in language, roles, media, and in institutional practices.
- Recognize that treating everyone the "same" does not mean that everyone is being treated fairly.
- Become familiar with different world views that various cultures represent.
- Develop a contemporary perspective about race and culture. Read cultural publications and listen to speakers from other cultures.
- Be more accepting of different descriptions and perceptions of life experiences in America.
- Attend activities and events that are sponsored by individuals outside of your ethnic group. Participate in workshops, conferences, and classes that deal with cultures.
- Involve all cultures represented in your community in your planning process.
- Take some risks.

COMMUNICATING ACROSS CULTURES: WHY EFFECTIVE CULTURAL COMMUNICATION IS SO IMPORTANT

- The Giving and Getting of Information: Whatever the enterprise, one needs to *exchange* information and ideas.
- Communication is Power: Communication is the foundation of all relationships.
- Miscommunication is Costly: Misunderstandings resulting from miscommunication can be destructive.
- The Language Barrier: Whenever language barriers must be crossed, important nuances may be lost. Mistakes in translation or interpretation jeopardize understanding.
- Different Communication Styles: Even in the same language, people have different ways of structuring information and argument, different conversations for social or business exchange, and different cultural assumptions that affect interpretations.
- The Components of Communication: Communication is more complex than simply one person talking to another. Communication consists of the message intended and the message received. It is important to focus not only on what is said, but also on what is heard (listening) and the effect of interpretation of the message on the receiver.

Communication is more than words and consists of at least four ingredients:

1. the information being transmitted;
2. the feeling that goes with it;
3. the non-verbal message; and
4. an implicit or explicit expectation of a response from the listener.

Often, parties to a cross-cultural communication focus on different components of the communication.

COMMON CAUSES OF MISUNDERSTANDINGS

- Each culture has conventions for courtesy. In the United States, many people perceive "How are you?" not as a real question but as a greeting. They do not expect an answer but anticipate a return greeting. Some people of other cultures find us rude when asked, "How are you?" and we do not wait for an answer.
- Sometimes people who don't use conventions may be perceived as rude. Some of the most frequently voiced complaints about those who speak English as a second language include:
  - **a.** They are impolite to others.
  - **b.** They don't admit when they don't understand.
  - **c.** They don't get along with others.

d. They speak their own language.
e. They are indirect, unclear, not to the point.
f. They don't inspire confidence.

It is important to train all staff to learn the conventions, niceties and specific formulas of communication.

- People who don't know the conventions may feel rejected.
- Other conventions establish "correct" tempo and tone of voice.
- The context also contributes to communication.
- Do not leap to conclusions about the character, motivation or integrity of an individual based on one interaction.
- Connotations of words and slang are not often learned in text books or classrooms.

SEQUENCE

- How people arrange information differs from culture to culture: Some people are likely to branch off on tangents before coming back to the subject. What some cultures may think is "off the point," another may consider to be the point–for example, talking about things that establish trust or rapport rather than the details of a business contract.
- Getting to the point is a common trait in the United States: Some people like facts, specifics and conclusions, while others like suggestions and implications.

PHASING

To exchange information across cultures, one needs to know how information flows in those cultures and when it is appropriate to engage in particular kinds of discussion.

- Culture affects how and when business subjects are discussed. In some cultures, it is more important to get to know the other person to establish rapport and trust–before doing business with them. Business and pleasure don't always mix.

OBJECTIVITY

- Logical, precise and orderly facts: To some people, logic, orderliness and accuracy are essential in communications. For them, imprecision is travesty. An aloof, impersonal objectivity as opposed to a more personal, emotional style may be a function of personality, but this is also culturally influenced.
- Trust: Trust has a significant effect on intercultural and interpersonal communications. Experiences have made many people feel they must confront and demand. People with different expectations about how they will be treated can be distracted from the issues because of reactions to the process.
- Dominating air time: Some people feel they can control communication by controlling and dominating conversation, but communication involves much more than talk. Listening and organizational skills are important in good communication between cultures.

CANDOR

- Differences in priorities for communication: Many respect candor but other people have their own ways of communicating real meaning. In some cultures, direct candor is not as highly regarded as are other values such as courtesy, sensitivity to feelings, loyalty to family, deference to age or position, and "face."
- Indirectness and ambiguity may be cultural or situational. Miscommunication is not always caused by cultural differences. People should think of all the possibilities and not merely reinforce their stereotypes by reducing differences to a geographical or cultural label.
- The essential task in cross-cultural communications is to increase understanding, not necessarily candor.

ACCENTS

- The bias against accents: Many people react negatively to accents and are rude when a person stumbles in trying to speak their language. Indeed, many people think *other* people have accents, but, of course, their own speech is accented as well. A common mistake people make is to assume that someone who speaks English without an accent is more competent, better educated or even more trustworthy, than someone with an accent.
- Correcting for bias: Not all jobs are affected by accents. An employer considering an applicant with an accent should assess if that

"PFC rekindled my belief in the library as an important tool for building democracy in the community and helping immigrants succeed in a new life."

person's accent will interfere with his or her ability to communicate, and if the accent will have any impact on job performance. Hearing an accent, the good communicator will try to listen more carefully, and to focus on the message, not on the accent.

- Colloquial expressions: People also make judgments based on the kinds of expressions others use.

TENSION AT THE INTERFACE

- When is it legitimate to discuss differences? When is it not? Strive to develop a trusting relationship, and begin to discuss differences long before problems arise. The solution is not to avoid contact, but to practice interacting with others. If you want to know what someone wants or thinks, ask them. Avoiding discussion of ethnic and other cultural differences is as destructive as obsessing over them.
- Listening is a vital part of communication.
- Physical contact: Physical contact and touching is perceived differently from culture to culture and individual to individual. Physical contact is not necessarily a form of affection, endearment, or familiarity. A nod or a smile may go further than a handshake or a pat on the back. Learn what body language is acceptable before making physical contact.

BICULTURALISM IMPLIES KNOWING AND BEING ABLE TO OPERATE SUCCESSFULLY IN TWO CULTURES.

TYPES OF RESISTANCE TO CULTURAL DIVERSITY

Culture-blind Resistance

This form of resistance is characterized by attempts to minimize or negate cultural differences as a way of failing to respond to such differences. This form of resistance can be seen at the personal or institutional level and may be done intentionally or at an "unconscious" level.

"We're all the same so there's no need to do anything special for any one (cultural) group."

Burn-out Resistance

In this form of resistance, while clear cultural differences among groups are acknowledged, the resisting agency (or person) argues that they are already burdened with too many demands. Responding to cultural diversity is seen as an additional burden or demand where there is insufficient "energy" to accommodate cultural changes.

"We have so many other demands and budget constraints at this time, I don't know how we could ever take on another project."

Disowning Resistance

Here again, cultural diversity is acknowledged, but the responsibility for responding to cultural changes becomes delegated or diffused. Demands for cultural responsiveness are often delegated from the top down to individuals (or agencies) who may possess cultural similarity to the target community, but who truly lack the resources to respond effectively to community demands.

"You need to talk to Mrs. Lopez. She takes care of those cultural programs."

Denial Resistance

This form of resistance is characterized by a simple, yet complete, denial of the need to respond to cultural diversity. Individuals (or agencies) in this group may be threatened or feel resentment toward cultural diversity and, therefore, deny the need to respond.

"Those people don't live in our community."

CULTURAL DIFFERENCES REVEALED THROUGH LANGUAGE

Biculturalism implies much more than bilingualism. Bilingualism has been defined in a variety of ways, but perhaps the most commonly accepted definition is varying degrees of understanding two languages. But biculturalism implies knowing and being able to operate successfully in two cultures. This means knowing two modes of behavior. It means knowing the beliefs, values, customs, and mores of two different groups of people.

There are many clues to cultural differences if we take the time to look for them. Language provides an excellent framework for studying these differences.

Language gives us clues to feelings. It also lets us know from what perspective the speaker views phenomena. We portray our feelings and view things differently when we are raised in different cultures. The same word in one language will often not produce the same reaction when translated into another language. Even some concepts are not accepted in the same manner because we have been conditioned to feel and express our feelings differently about many things.

The following illustrates a few cultural differences revealed through language by contrasting English and Spanish. Let us now transport ourselves to a nice, new modern airport where airplanes are buzzing in and out every few minutes. If you don't get to the airport in time for your scheduled flight, the first thing out of your mouth would be, "I just missed the plane." A Spanish-speaking person would express it as "me dejo el avion" because "perdi el avion," which is the literal translation, can mean many other things and is interpreted as "I lost the plane." Unconsciously, the fault for not being on that plane is being transferred from the person to the plane. Many phrases are stated in the reflexive, which can cause the Spanish-speaking person freedom from guilt but also portrays him to the Anglo world as not taking responsibility for his actions.

What has the above example told us about Spanish- and English-speaking people? It has told us much, if we are willing to listen. Let's take children for example. The above example tells us that Spanish-speaking children also express their feelings differently from English-speaking children about certain things because, again, guilt has been transferred from the person to the "thing." Some children think they are at fault, while other children do not. Children from different cultures do not necessarily feel the same way about guilt.

What else can language tell us about cultural differences? Let us examine a few individual words. In the English-speaking world, the clock "runs." This one word tells us a great deal about the people who use it. It implies future, momentum, action, and movement. In the Spanish world, how does one explain time? It is said, "el reloj camina." The clock "walks." What does this imply? Perhaps that there is more time for people; that they are not in such a hurry to conduct business. Words tell us much about a culture, but not necessarily about "all" people.

"Family" means different things to different people. In the English-speaking world, family usually implies the nuclear concept of father, mother, and one or two children. But in the Spanish world, the term family connotes the idea of many people, some who are related and some who are not. It includes all those people that they love. When a librarian discusses the concept of a family, she may show a visual of the parents and two children. Her experiential background has prepared her differently.

A few examples of language differences have been enumerated above. Are traditional schools meeting these differences? Johnny has the type of culture and the language that is represented in the typical school; Juanito doesn't have the language that is requested of him and sometimes his culture is in direct conflict with the one adhered to in school. This is true with most immigrants whose first language is not English and whose English skills are limited. Providing library programs and services that support and assist these new users, for whom libraries as public institutions may not be a common experience, is paramount if you want them to become regular users.

What needs to be known to provide effective library service? By all means, cultural differences should be known, understood, and accepted. In addition, some elements of basic language skills should be studied. Learning a second language is not easy. When people learn a second language, they have mastered a very difficult task indeed.

BY ALL MEANS, CULTURAL DIFFERENCES SHOULD BE KNOWN, UNDERSTOOD, AND ACCEPTED.

RECOMMENDATIONS

1. **Promote the concept of valuing diversity through the library system.** Reinforce the sense that serving all communities is a win-win situation for everyone. Staff will understand the need for new services in some communities while feeling confident that traditional library services will be maintained.
2. **Conduct a needs assessment (see chapter entitled "Community-based Needs Assessment") in the early stages of the program in order to understand and value the target population's needs**. Do it bilingually in the target language and English. Validation of the need and intent of the program and identification of the best means of responding to the community is essential.
3. **Provide library materials that are popular, relevant, and useful to the cultural communities that you serve.** These should include traditional materials such as classic literature, cookery and crafts, contemporary items like popular music and movies, and materials of immediate need such as immigration information and language learning. These services will draw a multi-

generational range of people from the community who will see the library as having materials which meet their needs.

4. **Provide bilingual and bicultural staff.** Reluctant or first-time library users may feel more comfortable accessing the library if there are staff members who can communicate with them in their native language.
5. **Bring the library into the community and the community into the library.** Attend community events and include cultural programs and activities at the library. Communities that traditionally do not use libraries will become familiar with the library at their events. Communities that hold programs in the library will begin to identify with the institution.
6. **Look at possible barriers to library use**. These include lack of awareness of the library and its services, and limited English skills. Translate library forms, signage and informational materials. Ensure attractive bilingual signage is prominently displayed. Promote the library in the community and conduct extensive outreach. The library will be more welcoming and people will be more eager to use the library if they understand how it works.
7. **Be aware of the importance of word-of-mouth and personal contact.** Create a welcoming ambiance for your program events. Community members who attend programs will respond positively and will spread the good word to others in the community.
8. **Provide staff training on culturally specific norms and needs.** Staff will feel closer to programs and the target population and feel that they are included in the program. Train staff on a few phrases and key library vocabulary in the language of your target population. The community will feel welcome due to friendly, knowledgeable attitudes. Staff will develop a better understanding of the particular difficulties in adapting to life in the United States that all recent immigrants encounter.

"PFC made the library, which presumed that we were already doing a good job of serving the Spanish-speaking, realize that we could do a much better job."

COMMUNITY LINKAGES AND COALITION–BUILDING

Community involvement was a critical component of Partnerships for Change (PFC) libraries' success in designing, implementing and evaluating library services for new populations. For many PFC libraries, community involvement has carried over into long-term strategic planning processes in their library jurisdictions. In a 1999 survey conducted five years after funding for the PFC Program ended, PFC participants ranked community linkages as "the most valuable/important principle of the PFC Program." Participants also named community linkages (e.g., partnerships and coalitions) as the number one principle still practiced in their library today.

The need for a new approach to community relations is based on the changes taking place in California and throughout the United States. First and foremost, demographic changes in library communities result in new information needs. In the 1990s, immigration topped one million people per year, with immigrants more dispersed around the country. Add aging Baby Boomers, increasing populations of children and young adults, and downsized employment opportunities to that demographic mix, and new information needs emerge.

DEVELOPING COMMUNITY CONTACTS, AND RELYING ON THEM FOR INFORMATION AND ADVICE, ALSO HELPS ESTABLISH COMMUNITY TRUST IN THE LIBRARY.

Many libraries and librarians are struggling with how to respond to these demographic changes in their communities. By developing community linkages, a library begins the process of getting the information necessary to restructure its collection and services, policies and programs. Even if two communities have similar socioeconomic and demographic profiles, their libraries may need to change in different ways.

As a basic principle, developing and maintaining strong linkages with the community can enhance almost every aspect of library service, including access, collection development, staff development and recruitment, programs and services, awareness, funding and evaluation. The future value of libraries depends on their ability to connect with their communities and adapt to those communities' changing information needs. Engaging the community can help determine if and how a library needs to change. Community linkages can also help secure the support needed to make those changes. By developing these linkages, the library begins to: work with its entire community to determine what they want; translate the library's mission to meet community needs; and make the hard tradeoffs necessary when restructuring library services.

A library can develop strong community linkages primarily by conducting a variety of outreach efforts. Formal evaluation of the PFC Program revealed that outreach efforts were the most successful program components. The evaluation also noted that "focused outreach led to increased library awareness by patrons from both their targeted and non-targeted communities."

Developing community contacts, and relying on them for information and advice, also helps establish trust in the library. By establishing relationships with kindred spirits–community groups, local agencies, religious organizations, local schools, adult schools and parents groups that share the library's goals and philosophy–the library can expand its knowledge of the community and its information needs. When you encourage library staff to serve on local boards, commissions and task forces, or to speak to community groups, their involvement expands the library's sphere of influence. Many PFC libraries also participated in local fairs, festivals and celebrations, creating opportunities for the library to actively participate in the community outside library walls.

While the overall design of the PFC Program intended to increase local involvement in the library in a broad sense, the PFC training emphasized formal coalitions as the primary way to involve the community in the library, and vice versa. Experience has shown that the intent of local participation should focus on community activities in general, not simply on the establishment of a formal coalition body per se.

While this chapter focuses on coalition-building, it is important to note that any activity which engages the community can help the library determine appropriate programs, services and methods of delivery. Tapping into the collective wisdom of the community can help the library discover information and answers that are critical to effective library service to everyone. Public librarianship is a knowing profession–one that keeps you alert to what's going on in the world, in society, and more importantly, in your library's own service area. Your library's value depends on your ability to connect with the community to meet the changing information needs of the people and organizations you serve.

YOUR LIBRARY'S VALUE DEPENDS ON YOUR ABILITY TO CONNECT WITH THE COMMUNITY...

Coalition-building can jump start your efforts to develop strong community linkages and begin the needs assessment process. But those linkages should go well beyond those established by coalition-building.

In this chapter, you'll learn what a coalition is and why they work; how to develop a coalition; how needs assessment, public relations and coalition-building interrelate; who to include in a coalition; coalition goals, objectives and strategies; how to maintain, reassess and adjust a coalition; and tips for soliciting contributions and volunteers. Developing and making the most of your community linkages can yield huge rewards for your library.

WHAT IS A COALITION?

A coalition is an alliance between two or more organizations or individuals that share a mission, resources and decision-making. The members of a coalition may differ on many issues, but they are banded together by the one issue or goal that they share. Typically, coalitions last until their goals have been met or the situation has changed. Community coalitions require resource commitment and they share goals, expectations and trust.

WHY COLLABORATE?

Complex social problems facing culturally diverse groups of people are related to many community institutions–the family, schools, churches, businesses, social agencies, and so forth. It may be easier to work alone, but some problems beg for a collaborative approach which applies the concentrated efforts of many people, rather than the isolated efforts of individuals. Building a coalition may be the best solution for addressing these complex social problems. In the PFC Program, coalitions were seen as critical to identifying how the library could address the needs of targeted populations. Coalitions can also provide opportunities for resource-sharing and promotion.

OBJECTIVES OF A COALITION

To be effective, a coalition must have clout, power, and contacts. Otherwise, it will find itself in the frustrating position of making recommendations that never get acted on, or plans that are never implemented.

The objectives of a coalition are to:

- Maximize the power of participating groups through joint action.
- Eliminate unnecessary duplication of effort or activity.
- Pool talents and resources.
- Develop and demonstrate widespread public support for an issue, action, or unmet need.

The coalition's purpose includes:

- learning about the targeted population and community structures necessary for both community-based needs assessment and public relations/marketing activities;
- developing ongoing links to the community necessary to continue needs assessment and public relations/marketing activities; and
- continually reviewing library service programs to keep them relevant.

To be successful, coalitions need to:

- Include individuals and organizations that are well connected to the community.
- Exchange resources.
- Be mutually beneficial to all parties.
- Be consensus-oriented.
- Rely on collaborative strategies.

WHY COALITIONS WORK

The centerpiece of a useful theory of coalition-building is the concept of "equitable exchange among participants." Basically, coalitions develop when each member expects that his or her efforts will have a return at least equal in value to the effort expended, and that there is an equitable distribution of rewards among all members. Note that what is exchanged may be either tangible (funds, facilities, mailing lists, staff, or clients) or intangible (prestige, goodwill, or useful information).

The point is this: Know what you and what each partner wants from the coalition, and what the coalition can offer each prospective partner. Is it an equitable exchange? Does the partner agree? If so, then you are on your way to building a coalition.

DEVELOPING A COALITION

Coalition-building is important because the coalition is the major resource for needs assessment, as well as program planning, implementation, and evaluation. The coalition you develop to conduct the needs assessment may be restructured and expanded as you move into program implementation. Consider including organizations and people who might have linkages to the target community, or who may recommend others.

Initially, you should seek the coalition's consensus on the goals and objectives of the needs assessment; solicit recommendations on appropriate needs assessment methods; and obtain some commitment for assistance or continued participation in the coalition.

STRATEGIES IN COALITION-BUILDING

Effective coalition-building requires using two important community resources: community gatekeepers and the local media.

Community gatekeepers include:

- Churches and religious leaders
- Schools (including adult education) and English-as-a-Second-Language (ESL) classes
- Community role models
- Community organizations and service organizations
- Local businesses
- Custodians of a community gathering place (e.g., coffee shops, stores)
- Health care providers
- Leaders, professors and scholars

Local media includes:

- Ethnic language and mass market radio and television
- Ethnic and mass market newspapers
- Local outreach efforts
- Local newsletters
- Local bulletins from community service organizations

THE PROCESS OF COALITION-BUILDING

The process of building community coalitions and the process of assessing community needs go hand-in-hand. Both involve gathering information and establishing linkages with key community people. Some of the information gathered early in the process will be questions to key individuals about "who else" to pursue as a potential coalition partner. In the process of talking with people, selected linkages will "gel" on both personal and organizational levels. That is, coalitions will form out of the process of assessing needs, and vice versa.

Where does the public library start in approaching "the community"–in this case, communities with special ethnic, cultural or other identities? The following process is suggested as a guide to the coalition-building process.

STEPS FOR FORMING COMMUNITY COALITIONS

1. Formulate goals and objectives.
2. Know your coalition readiness.
3. Identify potential partners.
4. Set a plan of action.
5. Build the coalition.
6. Maintain and adjust.

WHO TO INCLUDE IN A COALITION

After library staff has identified the target population's problem or need, determine who in the community is already doing something to alleviate the problem or need, and who else in the community is concerned about the problem or need. You want the broadest representation possible of those organizations and individuals who are already focused on the targeted population's problem or need. But, you also want to include those individuals and organizations that can be most effective in influencing change,

even if their interest in the target population is initially peripheral. The following activities will help you gather the information:

1. Identify local organizations. Many local United Way organizations and community service agencies publish directories of organizations that serve culturally diverse populations or groups.
2. Make a list of the types of people and organizations you feel should be involved in the coalition.
3. Become familiar with the goals, priorities, politics and membership of the identified organizations and individuals.
4. Get information from your library's staff and volunteers who belong to the community organizations. Talk to members and officers of the other organizations, to community leaders, and to members of the medical community.
5. Obtain copies of organizations' brochures and publications. If possible, meet with representatives of these groups at their respective facilities.
6. Contact people who could be an asset to the coalition. Even if they cannot join your efforts, they might convince others to join the coalition.

DEVELOP YOUR AWARENESS OF THE TARGET POPULATION'S CULTURAL VALUES, CUSTOMS, AND MORES.

COALITION PARTNERS

Finding potential partners will probably involve many of the techniques used to conduct the needs assessment, including identifying community leaders, power brokers and "key informants." One important issue is how to placate, or at least not offend, people who can block your way but are otherwise of limited value to your program. Intangibles (prestige, connection, visibility, and especially, information) should not be underestimated as resources that can be both given and received. Finally, be sure to involve community members in your analysis of what to "exchange" and in identifying sensitive issues.

CONTACTING POTENTIAL MEMBERS

Recruiting other organizations into your coalition takes time. Before contacting those organizations you want to include, look at the proposed coalition from their point of view and develop persuasive arguments about the benefits of becoming involved in your library's efforts. Develop your awareness of the target population's cultural values, customs, and mores.

When possible, work through members of your library's staff and volunteers who belong to those organizations, or through a contact who is respected by the leaders in that specific community. Expect that other organizations will want to become familiar with your library program before they commit themselves. You can anticipate this by sending them copies of any material about your program and inviting them to attend a planning meeting.

After contacting several interested organizations, meet with their leaders to discuss networking possibilities. Be candid with each other in discussing potential problems and cultural differences that might complicate your efforts to work together. Each group may need reassurance that it can maintain its own identity if it joins your coalition.

Assure these new contacts that outreach can be a joint effort. This means that publicity, praise, and credit will be shared equally. Begin sharing responsibility immediately by dividing up the task of contacting other agencies and organizations. Determine who has the most ties with the organizations that are to be contacted.

COALITION PLAN OF ACTION

- Personalize your approach to prospective coalition members with face-to-face contact and comfortable settings.
- Formalize your approach to prospective coalition members with written invitations and minutes, and careful use of introductions and titles.
- Commit the resources needed to make appropriate contacts, to make meetings convenient and enjoyable, and to do individualized follow-up with each partner.
- Protect your and your partners' most precious resource: time.
- Develop a short time line to do the basic coalition-building and be sure that all coalition partners understand that the coalition's work is ongoing.

COALITION-BUILDING

- Once there is more than one partner involved in the coalition, assignments for further coalition development should be shared so that all partners "own" the coalition.

- There should be explicit acknowledgment among coalition members about who does what, and when.
- Coalition-building tasks include any activity that identifies partners or develops the bonds among them. This includes initial work activities of doing the needs assessment that can give team members opportunities to get to know each other and to learn to work together.
- Tasks may have to be stated generally (e.g., "Find an expert who can provide demographic statistics"), but should be as specific as possible (e.g., "Ask Professor Chung at Cal State Valley").
- Create a Responsibilities Log, or Coalition Action Plan, and make it a working document that is continually expanding and being revised.

HOW TO MAINTAIN, REASSESS AND ADJUST YOUR COALITION

The role of monitoring the coalition is essential to keeping members interested and productive. It should be done periodically as a team exercise. Expect that, in some instances, the coalition may dramatically change in purpose, composition, leadership or other vital characteristics. One or more coalition members may quit, or the coalition may even need to dissolve, especially if its goals have been achieved.

One significant accomplishment for a new multicultural coalition is survival, and the coalition should congratulate itself accordingly on a regular basis. Strengths and weaknesses have to do with such matters as composition (e.g., ethnic representation, community leaders), consensus, activity level, and information gained. Actions needed may range from easy (e.g., formal recognition of accomplishments) to painful (e.g., giving up on a favored, but unattainable, goal) to nearly impossible (e.g., getting rid of a troublesome partner).

COMMUNITY INVOLVEMENT

Community involvement and community linkages are major components of Partnerships for Change. The coalition is just one method of involving the community. The community can also become involved by assisting the library with resource development (cash and in-kind donations), and recruiting volunteers (expertise, hands-on assistance, and political influence).

VOLUNTEER RECRUITMENT

Think about why people volunteer. Generally, the reasons fall into two categories: altruism or self-interest. An appeal for volunteers should include both.

Many of the same issues addressed in solicitation of contributions apply when soliciting volunteers. Volunteers can also be recruited from many of the same sources. When making an appeal to prospective donors, allow them a number of options for providing support: donating cash, making in-kind contributions, or volunteering, which can include consultation, training, loaned executives, and direct services.

TIPS FOR SOLICITING CONTRIBUTIONS OR VOLUNTEERS

- Identify your library's needs. What equipment, supplies, personnel, expertise, etc. do you need?
- Identify businesses/corporations/community organizations that might have an interest in your library's goals. These might include vendors and organizations that support cultural diversity, literacy, libraries and other issues addressed by PFC. Chambers of Commerce, business and professional organizations, trade associations, civic organizations and community foundations may be sources of this information.
- Identify the appropriate person(s) to make the appeal. Would the appeal be more effective coming from a coalition member, library staff, Friends of the Library, or an elected official? Decide what background information is needed by the person(s) or organization(s) making the appeal. Prepare a case statement, letter or briefing paper for the person making the appeal.
- Find out how the prospective donor prefers to be approached (letter, telephone call, personal visit, application).
- Identify the benefits of contributing for the giver. What are the prospects' priorities? How will the gift or volunteer activity be recognized? What other benefits might be derived?
- Send a written thank you to the donor or volunteer.

COMMUNITY INVOLVEMENT AND LINKAGES ARE MAJOR COMPONENTS OF PARTNERSHIPS FOR CHANGE.

- Keep in touch with the donor/volunteer. Send newsletters and/or progress reports; help them see what impact their contribution or volunteer activity has had on the library's program goals or on the target community.

DEVELOP A STATEMENT OF UNDERSTANDING

A statement of understanding is a formal written document that describes the various activities the coalition will pursue over a period of time, usually one to three years. The purpose of a statement of understanding is to provide a written basis for a cooperative working relationship between your library and another organization. The statement of understanding also suggests a pattern by which the two organizations may coordinate their personnel and services, and can reassure both parties as to the goals, objectives and level of commitment required.

"The ongoing challenge is to provide a library setting that is comfortable for people of various ethnic communities and to provide them with services that are useful to them."

RECOMMENDATIONS

1. **Establish community trust.** It is vital for your program's success. Generate interest and trust in the library as a friendly place for formerly wary non-users by making yourself and the library as visible as possible in the community. Learn about the entire community. Become aware of factions, take time to build relationships, and listen.
2. **Form a coalition to discuss the information/ library needs of the changing community.** Support your library's coalition as originators of project activities rather than as pro forma bodies that simply validate the decisions of library staff. Empower them to be decision-makers, not just silent partners.
3. **Build rapport with community leaders to make them library advocates or "ambassadors" for your library.** Value the input you receive from individuals as well as other agencies, organizations and businesses.
4. **Conduct outreach efforts and participate in community events.** The most successful outreach activities are those tied directly to the cultural traditions of the target population.
5. **Reach out to language schools, churches and businesses with information about the library's services and programs for the target population.** Enlist their help in sponsoring or promoting library programs, events and celebrations.
6. **Establish community linkages by utilizing volunteers.** Volunteers can be valuable resources with lots of knowledge about the targeted community and its information needs.
7. **Build partnerships with community groups to help address community issues by providing pertinent information and materials.**
8. **Attract community organizations by making the library available for their meetings or language classes, especially English-as-a-Second-Language classes or by making it available for community events and celebration.**
9. **Increase the visibility of the library in the community by attending various community group meetings.** Involve library staff members in community projects and events.
10. **Bring the library into the community.** Your library's presence at local festivals and community events, while often difficult to arrange for the first time, provides invaluable opportunities to promote the library and interact with the community.
11. **Use promotional events and outreach activities at local schools, including adult schools, to reach students, specifically for programs with tutoring components and literacy programs.**
12. **Use word-of-mouth and personal contact to understand community needs.**
13. **Sponsor coalition appreciation events so that your library program is more than just another volunteer activity for coalition members.** Community coalitions can play a major role in community needs assessment, evaluating cultural programming, developing events calendars, prioritizing the acquisition of culturally relevant materials, and with media and promotional efforts.

COMMUNITY-BASED NEEDS ASSESSMENT

Conducting a community-based needs assessment can benefit your library in numerous ways. You will be better able to determine how well or how poorly your library is currently meeting the needs of its entire service area population. Identifying the information needs and wants of the community will enable you to develop new programs, services and collections that meet the customer needs of the entire community.

The real world of financial constraints in library budgets requires libraries to use their limited resources wisely. Needs assessment can help you and your library decide where to invest those resources for maximum results. The information you gather with a needs assessment can also help you convince others that significant changes in library services, programs and collections are needed. There are often staff, managers, boards of trustees and outspoken users who do not want to see any change in the status quo. A needs assessment will help you convince others of the need for change.

IF YOUR TARGET GROUP HAS NO HISTORY OF LIBRARY USE, THE LIBRARY IS A STRANGER.

Determining the information needs of the community can begin with a review of existing data, and by networking with community organizations and agencies to learn about the information needs of the community. Needs assessment can be done in the library, via mail, in person at community events or locations, by telephone or door-to-door, or with focus groups. The method most likely to solicit complete information is the personal interview with individuals via telephone or door-to-door contact. Open-ended survey questions offer built-in opportunities for interviewers to follow up and clarify responses, resulting in the most complete responses.

Reaching the people your library wishes to serve may require that you engage the community in new ways. For example, by developing relationships with community organizations and leaders, the library has better access and credibility in the community during the needs assessment process. If your target group has no history of library use, the library is a stranger. By establishing a relationship with the target community's organizations and leaders, the resulting trust will give you entry to the community and increase participation in the needs assessment process.

Aside from identifying the information needs of the community, needs assessment can help the library determine preferred methods of service delivery, preferred locations of service, and preferred methods of promoting services and programs. By asking what barriers prevent non-users from accessing the library, you identify ways in which the library can adjust its method of service delivery.

By asking respondents what programs and services would bring them to the library, or how best to inform them about the library, the library gains insight into what, where and how to provide service as well as how to promote it. For example, while English-language media may have been the traditional approach to publicizing library programs and services, bilingual fliers distributed through schools, churches or English-as-a-Second-Language classes may achieve better results with the targeted community. Where open houses and special events in the library may have worked in the past, bringing the library to the community by participating in parents' nights at local schools, or in local community festivals may reach a much wider audience in the ethnic community.

The Evaluation and Training Institute's final evaluation of the PFC Program noted that, in general, "specific program activities and service program design changes were successful to the extent that such efforts directly addressed community needs."

In this chapter you'll learn: what community-based needs assessment is; why it is important; how it drives the planning process; what

community is; how to use the GRACE method of needs assessment; needs assessment methods and data sources, and the advantages and disadvantages of each; how to define needs assessment findings and write conclusions; how to develop recommendations and objectives; and how to plan a community forum.

By fostering needs assessment skills, libraries can maintain and enhance their value as information centers and specialists to a changing population. Needs assessment is not a simple process or a quick fix, but it is invaluable in ensuring library services remain relevant to the needs of the entire community.

BY FOSTERING NEEDS ASSESSMENT SKILLS, LIBRARIES CAN MAINTAIN AND ENHANCE THEIR VALUE AS INFORMATION CENTERS AND SPECIALISTS TO A CHANGING POPULATION.

In the 1999 Survey of PFC Participants, respondents stated that community-based needs assessment was one of the most important/valuable PFC principles. In rating the principles, participants rated needs assessment higher than any other principle. Forty-two percent of the respondents gave examples of how needs assessment was still practiced in their libraries. One respondent wrote,

> *"Our library started the PFC Program utilizing the needs assessment, and we have since used the same format for surveys to begin a new literacy program and a computer center, and to help formulate the strategic plan."*

WHAT IS A COMMUNITY-BASED NEEDS ASSESSMENT?

Needs assessment is the process of gathering data and information about a community that can then be used to draw inferences and conclusions about how adequate or deficient library resources and services are.

INTERNAL AND EXTERNAL DATA

Internal data is information that is available within your library system. It may include current information on user patterns, previous needs assessment data, staff, financial and other resources, past programs directed towards the targeted ethnic community, current status of collections, and staff philosophy and values related to changing the existing situation.

External data is information that exists outside of your library system. The information and perspectives shared by the community partner are external data. Other sources of external data might include demographic statistics gathered by government and other organizations (e.g., U.S. Census), attitudes of the target community, data on information needs of the target community, and experiences of communities which have already addressed the needs of similar populations.

DATA GATHERING

Data gathered may include:

- demographic statistics on the community's population;
- formal and informal resources in the community;
- information about adequacy of current resources (e.g., user satisfaction surveys);
- gaps in services or resources;
- community opinions about desired services and service approaches; and
- data on current usage patterns.

Needs assessment data may include hard "facts," such as demographic data and current use statistics, and "soft opinions and perceptions," such as subjective expressions of service effectiveness.

WHY IS NEEDS ASSESSMENT IMPORTANT?

Needs assessment is important because it is the first step in the planning process and a major component of community problem identification and analysis.

Problem analysis identifies the conditions to be altered and guides the design of program strategies. Problems state the difference between what currently exists and what ought to be. A community problem exists when a considerable number of people identify a condition that must be changed.

DRIVING THE PLANNING PROCESS

Needs assessment and problem analysis should drive the planning process and be carried out within the context of the organization's mission. For example, there are many needs in the community. The public library should examine these within the context of its mission which generally focuses on making information accessible to the public.

The approach chosen should be based on a clear assessment of community needs. Needs assessment may also include an assessment of the library's organizational capability. This can

include an examination of the library's current resources, user patterns, relationships with other agencies and community organizations.

CONDUCTING A COMMUNITY-BASED NEEDS ASSESSMENT

To conduct a community-based needs assessment include these steps:

- Identify population segments in your community.
- Document current patterns of library use.
- Identify information needs of each population segment.
- Identify alternative resources used.
- Identify factors that support library use.
- Determine barriers to library use.
- Solicit the community's preferred service approaches.
- Assess adequacy of current library resources in meeting information needs.
- Obtain data to use in program design for meeting information needs.

DEFINITIONS OF COMMUNITY

Community can be defined as:

- the territorial organization of people, goods, services and commitments; geography is a key determinant of the boundaries of this type of community; and
- persons of related interests or other common characteristics such as the Asian community or the social work community; geographic boundaries do not necessarily define the boundaries of interest-oriented communities.

PARTNERSHIP TEAM CHOICES

The PFC partnership team approach provided a solid foundation for all PFC activities. One of the first responsibilities each team faced was choosing the target population and/or community for the local library program. That decision also influenced other choices, such as:

- Which community leaders/key informants to interview? Will you include persons outside the geographic area?
- What are the information needs and service preferences of the ethnic community versus the needs of the target community within a particular geographic area?
- Will a different priority be placed on the needs of those in close proximity to the library, as opposed to the broader needs of the target group?
- Will coalitions include a broad range target community, or will they be restricted to neighborhood representatives and institutions?
- If your focus is beyond your geographically defined community, how will your efforts complement, conflict with or duplicate those of other libraries?
- What library policies affect our decisions as to which communities we are serving?

THE "GRACE" METHOD

Needs assessment is a process. It is ongoing and consists of several steps. The five-step process can be thought of as the GRACE method, since the word "grace" means "skill at avoiding the inept or clumsy course." The GRACE method helps the user avoid a clumsy, uncharted course. The five steps require planning, teamwork and focus.

GRACE: A Five-step Plan

- **Goals and Objectives:** Set goals and objectives for conducting a community-based needs assessment.
- **Resources:** Identify resources needed for conducting a community-based needs assessment.
- **Action Plan**: Determine activities needed for conducting a community-based needs assessment.
- **Coalition**: Build coalitions with other organizations for conducting a community-based needs assessment.
- **Evaluate**: Assess the effectiveness of the needs assessment process.

GOALS AND OBJECTIVES

Goals:

- state expected outcomes;
- describe the condition to be changed;
- provide direction and guidance;
- serve as a planning umbrella;
- comply with the library's mission; and
- mirror internal and external data.

THE PFC PARTNERSHIP TEAM APPROACH PROVIDED A SOLID FOUNDATION FOR ALL PFC ACTIVITIES.

Examples of goal statements for library needs assessment projects:

- Increase Modesto County Public Library's knowledge of the information needs and library service preferences of the young adult population in our service area.
- Determine supports and barriers to library usage by Vietnamese and Samoans in the Gardena Branch Library's target area.

Goal statements set the framework for all other needs assessment activities. Goals determine the broad categories of information to be collected, the types of coalitions to be organized, and the general direction of expected results.

Objectives:

- state specific anticipated results;
- are measurable or observable;
- are achievable;
- are consistent with the mission and goals;
- are time-limited; and
- provide the basis for evaluation.

Examples of objectives for needs assessment include:

- Identifying the information needs and service preferences of young adults by July 15, 2001.
- Gathering data from a minimum of 12 senior citizen organizations by August 1, 2001.

Objectives must be feasible. You will need to assess your library's resources to determine if you can reasonably expect to meet the objectives. You must also consider your current relationships and some degree of trust or credibility.

RESOURCES

Things needed to implement community-based needs assessment include:

- Human resources
- Equipment
- Money
- Space
- Time
- Furniture

Once you have identified the goals and objectives of your needs assessment, the next step is to determine what resources you have on hand to implement the assessment.

Resources are anything you need to carry out the project. They include:

1. Human resources. How many staff members, coalition partners or volunteers are available to assist in needs assessment tasks? What skills do they possess? Have they participated in other needs assessments or community surveys? Are they ethnically and culturally reflective of the community to be assessed? Do they have facilitation skills?
2. Equipment. If you hold community forums, focus groups or coalition meetings, flip charts and easel pads facilitate the recording of discussions and help participants to follow the discussion. You may also need extra chairs. If you plan to conduct telephone surveys, do you have enough instruments and phone lines to accommodate this activity? If not, you may negotiate with another community facility for space or use of their telephone banks.
3. Money. Are funds available to pay for the expenses involved with needs assessment? Some items that may require funding follow:
   - Printing and duplication. You may need printed materials such as fliers, brochures, posters announcing the assessment process, community meetings and other related activities. You may need to print survey sheets and other assessment tools.
   - Supplies. Additional supplies may be needed. Extra pens, pencils, papers, legal pads, etc. may be needed for participants in community meetings, surveys and other data gathering activities.
   - Refreshments. If you host community forums, focus groups or coalition meetings, you may want to serve refreshments. You will have to budget for these, or ask your Friends group to provide them.
4. Space. Will you hold community meetings? Do you have facilities large enough to accommodate these meetings? If your target area is large, you may need to find other facilities in the community to hold meetings. Is your facility accessible to all of the potential community participants you want to attract, or would they be more likely to attend at a local school, church or other community building?

5. Time. Time is also a resource. The needs assessment process must be completed within a certain amount of time. The assessment must be completed in time to allow you to analyze and incorporate the results into your plan. The amount of time staff can devote to the needs assessment is another factor. If staff can only work on the project a few hours a week, that may influence the methods of assessment you choose.

ACTION PLAN

An Action Plan includes:

- a list of all tasks that must be performed in order to complete the needs assessment;
- identification of persons responsible for each task;
- a set of time lines for completion of each task; and
- a set of benchmarks or checkpoints for monitoring progress.

The action plan is your practical guide to completing the project. It directly relates to the objectives and serves as the step-by-step delineation of how the objectives will be achieved.

You should allow some flexibility in the early planning stages because you will want to involve the coalition in the front-end planning. The coalition members may have ideas about data sources, appropriate community contacts and needs assessment methods that might prove effective with the target population. If you plan everything before you involve the coalition, you may alienate potential coalition members who may see no role for themselves or who may feel that they are being used to "rubber stamp" your plan and to provide credibility to your efforts without having much actual input in the process.

After the coalition is formed, you will need to detail all of the tasks and set time lines. You will also need to assign specific people to specific tasks. You may establish checkpoints to see if your plan is on schedule.

The action plan must also include activities related to data compilation, data analysis and conclusions, inferences and recommendations based on data. The coalition should be involved in these activities since the conclusions form the basis of program design.

COALITION

Coalitions:

- include individuals and organizations;
- exchange resources;
- are mutually beneficial to all parties;
- are consensus oriented; and
- develop collaborative strategies.

Developing the coalition is a key step because it is a resource for the needs assessment, program planning and evaluation. The coalition you form to conduct the needs assessment may be restructured and expanded as you move into program implementation.

Coalition members can be tapped for their knowledge or resources individually. You may establish telephone contact or initiate face-to-face visits to solicit their input and agreement to collaborate. As soon as possible, a meeting should be held to convene as many of the coalition members as possible.

DEVELOPING THE COALITION IS A KEY STEP...

Your goal should be to gain consensus on the goals and objectives of the needs assessment, solicit recommendations on appropriate methods and obtain some commitment for assistance or continued participation in the coalition.

EVALUATION

Evaluation is an assessment of:

- outcomes, products or results; and
- process or methodology.

Evaluation is basically a judgment of worth or an appraisal of value. Evaluation is concerned with assessing programs after their completion. Two major purposes of evaluation are to determine the extent to which a program achieved its objectives and to identify reasons for a program's successes and failures.

Evaluations can assess results (products or outcomes) or processes (the methods by which the project was conducted). Outcome evaluations are assessments of the level of achievement of objectives. Process evaluation measures compliance with the action plan.

Evaluation is an important component of the needs assessment process. You will want to make a judgment as to how reliable the data is. How consistent is the information? Does information from several sources identify the same needs? How reliable were the sources of information? Is the data "facts" or opinions/perceptions?

"I have used the PFC principles as the basis for other successful grant applications, resulting in valuable programs."

A process evaluation looks at the data collection methodology and might pose the following questions:

- Did the process follow the action plan?
- Did the coalition include appropriate members?
- Was the coalition an asset?
- Was there a mutual exchange of information?
- Was the sample valid?
- Was the sample representative of the target population?

If programs are to be based on the data collected, you want the information obtained to be valid, reliable and representative of the population to be served. If you have serious questions about the credibility of the data, you might consider postponing program development until you can check the accuracy of the data or collect additional data.

DATA SOURCES FOR NEEDS ASSESSMENT

Data and information may come from a variety of sources. In designing a needs assessment and deciding which methods to use, it is important that you decide what information you need, why you need it and how accurate it must be. The methods you choose should be those that can potentially provide the information you need, with the desired level of accuracy in the most timely and cost effective way.

The five data sources are:

- Existing data
- Key informants and stakeholders
- Focus groups
- Community forums
- Surveys

EXISTING DATA

Existing data is information that has already been gathered.

Existing data may include:

- Census data
- Government statistics
- Data collected by service providers (e.g., Head Start programs or Housing Authority)
- Previous research and needs assessments
- Academic studies
- Consumer profiles
- Social indicators

Existing data is a logical place for libraries to begin the needs assessment. A review of existing data can be useful in framing questions for key informants, surveys, forums and focus groups. The data may also serve as a broader context in which to analyze and compare the specific data you collect as part of this process. Existing data is useful in pointing out general trends in society or within a particular target group.

Libraries generally have access to this information. University libraries are often repositories for government reports. Local and regional planning organizations, trade associations, business alliances and local and national associations are good sources of existing data and trend analyses.

Advantages of Using Existing Data

1. Vast pools of data already exist.
2. Libraries have easy access to much of this material. Many will have quite a bit of data in their own collections.
3. It provides a context and trend awareness for specific library needs assessments.
4. It can serve as a foundation on which to build other assessment tools, such as: surveys, interview schedules.
5. It is an inexpensive method that does not require very specialized expertise.

Disadvantages of Using Existing Data

1. You have no control over how or when existing data was collected.
2. Data may reflect biases of the researcher or limitations in survey methods.
3. Data may not be specific to the neighborhood, community or target group you are studying.

KEY INFORMANTS

The key informant approach is a research activity based on information secured from those who know the community's needs and utilization patterns. Therefore, the selection of a key informant is based on the individual's broad or in-depth knowledge of the community, its people and their needs.

Key informants might include:

- Service providers who serve the target population
- Leaders of social, civic and neighborhood organizations
- Leaders of businesses and professional organizations
- Religious leaders
- Community activists
- Long-term residents
- School principals
- Academicians
- Natural or informal leaders
- Elected officials
- Media personnel
- Stakeholders

Advantages of Using Key Informants

1. This approach is relatively simple and easy to implement.
2. It permits individuals with many different perspectives to have input.
3. Key informants help to establish lines of communication with various segments of the community, including individuals and organizations.
4. This approach identifies problems which may become public issues.
5. It also indicates program approaches favored by community leaders.

Disadvantages of Using Key Informants

1. Information reflects individual biases.
2. The approach requires good interviewing and communication skills.
3. The views expressed may not be representative of the total community.
4. There is potential for excluding informal, grassroots leaders who may not be as visible as formal leaders.

FOCUS GROUPS

Focus groups are similar to *ad hoc* advisory groups. Focus groups may be used to sample the opinions of users and potential users of your services. To form a focus group, invite people who are representative of the population, whose opinions you want to sample, to a one- to three-hour meeting. You will want to prepare a list of questions in advance to guide the discussion.

Focus groups could be constituted in several ways.

- Similar types of participants addressing the same set of questions or issues. Examples include service providers addressing the information needs and service preferences of their constituents, and business representatives addressing their special information needs.
- Heterogeneous participants addressing the same set of issues. Examples include key informants representing a variety of opinions, commenting on the information needs and barriers to library use and members of several ethnic communities discussing their communities' attitudes and beliefs about your library and its services.

Advantages of Using Focus Groups

1. Focus groups enable you to speak directly with representatives of interest groups in your community.
2. Participants can benefit from the synergy in the group. Participants can hear and comment on remarks and ideas of others.
3. Participants may seek to gain consensus.
4. You can clarify remarks to ensure that you have the appropriate understanding of participants' meanings.
5. You will be able to hear and observe nonverbal cues as a means of judging participants' depths of feelings about certain issues.

Disadvantages of Using Focus Groups

1. You may experience difficulty bringing together the appropriate or desired groupings of people.
2. The opinions expressed may not be representative of the feelings of other members of the community.
3. This method requires good facilitation and group-process skills. You may experience problems if you do not have access to someone with these skills.

COMMUNITY FORUMS

Community forums are meetings open to the general population of a community, providing an open forum for airing opinions about a particular issue. Community forums can involve larger numbers of participants than the key-informant interviews and focus groups. Information is based on the opinions of individuals. Community

forums broaden the range of participants who can be engaged in a face-to-face discussion of issues. Community forums may also serve as media events, thus bringing the issues under discussion and diverse community points of view to the attention of others who may not be in attendance.

Community forums require advanced planning in order to stimulate participation by a broad cross section of the community. The PFC coalition may be especially helpful in generating participation. You will need to publicize the event through a variety of channels to reach special interests within the community.

Schedule the meeting at a central location, accessible to public transportation. The event should occur at a time after the regular work day (evenings or weekends). You may need to arrange for child care to allow parents of small children to attend.

Advantages of Using Community Forums

1. Community forums are relatively easy to conduct.
2. Forums are relatively inexpensive to implement.
3. A broad cross section of the community can be invited to participate and give input.
4. Forums can be used to educate the community about your programs and plans.
5. Forums can be the beginning of an ongoing process of dialogue with the community.
6. People who are not affiliated with organizations in the community have an opportunity to give input.

Disadvantages of Using Community Forums

1. Participation may be sparse or nonrepresentative of the views of the broader community.
2. The discussion may turn into a gripe session.
3. Issues may surface that represent the community's foremost felt needs; however, the concerns expressed may be beyond the purview of the library.
4. Participants' expectations of future changes may be unrealistic. They may think that all issues raised will be addressed by your library in the future.
5. Information obtained may be highly impressionistic. Opinions and perceptions may be aired that are not based on facts. Information may be difficult to analyze systematically.
6. Forums may require translators to be effective.

PLACES TO ADVERTISE COMMUNITY FORUMS

- Print media, including major community newspapers, ethnic press, and local throwaways
- Radio and television, including public service announcements on network and independent stations; appearances on talk shows; ethnic radio and TV stations; and cable television public access programs
- Service providers such as social service agencies, hospital emergency rooms, community health clinics, legal aid offices, child-care providers and public assistance offices
- Churches and religious organizations
- Public, parochial, and private schools
- Immigration offices/legal assistance
- Community recreation centers
- Senior citizen centers
- Youth/teen centers
- Employment/job training services programs
- Union halls
- Community businesses and merchants such as grocery stores, pharmacies, ethnic product stores, restaurants, specialty stores, book stores, liquor stores, laundromats, hotels and motels
- Folk healers/spiritualists
- Political/elected officials
- Community organizations
- Fraternal organizations/lodges
- Ethnic business and professional organizations
- Neighborhood associations
- Entertainment centers and movie theaters
- Your library

SURVEYS

Surveys identify needs by collecting data from a sample population of the community. Survey information can be general or very detailed.

Surveys can be conducted:

- In writing
- Over the telephone
- In face-to-face interviews
- Electronically

The return rate is better with telephone or face-to-face interviews; however, these methods will require more human resources to conduct the interviews. In addition, someone will have to code, summarize and analyze responses. Interviewers may need to be trained to conduct the interviews without interjecting their own biases. You will need to recruit interviewers with good human relations skills, and perhaps bilingual capabilities.

Questionnaires should be written so as to elicit the information you need. Care should be taken to ask for clear, direct responses. You may include a combination of objective questions (yes/no; true/false; multiple choice), and open-ended-response questions.

Survey research can be very time intensive. Interviews may have to be scheduled in advance. If face-to-face interviews are used, you will need to schedule a place that is convenient for interviewees for these to occur.

Ask your coalition to help you develop the survey, and translate it if necessary. Written questionnaires can be distributed and administered by service providers, churches and community organizations. If these organizations are members of your coalition, they can provide you with access to a cross section of the community and lend legitimacy to your efforts. You could also decide to hire a professional market research firm. Whatever you decide to do, be sure to pretest your survey or questionnaire among a sample of the community.

Advantages of Using Surveys

1. This method is the most scientifically valid and reliable approach.
2. Surveys allow individuals to express their opinions without being influenced by others in the group.
3. This format lends itself to coding and tabulating responses.
4. Costs and time required can be flexible depending on the size of your sample, the extent to which you sacrifice reliability of the sample, length of the questionnaire, and implementation method.

Disadvantages of Using Surveys

1. Some individuals may not want to participate or may not have the literacy skills to do so.
2. It may be difficult to select a sample.
3. The survey sample may not be accessible within your time frame.
4. It could require additional human resources to implement.
5. It could be expensive and time-consuming.

WRITING CONCLUSIONS

Once you've collected the data, you need to state the findings, or results, of your study. A report of the findings identifies, by source, what information was obtained with no inferences made at this point. Findings include a report of:

- information obtained, by source;
- frequency of responses;
- comparative data (business community versus community activists' responses);
- points on which there is high, medium, low or no agreement; and
- comparisons of data by method of collection.

After reporting the findings, you will want to determine what the data imply. What does the data mean? What story does it tell? The process of answering these questions involves subjective judgments. Values always play a part in the interpretation of so-called "facts." A conclusion that is perfectly obvious to one person may have a diametrically opposed meaning to another. It is especially important to involve a cross section of people from the target community in the analysis of the data. Cultural differences in the interpretation may make a major difference in the types of conclusions drawn and recommendations made.

Needs assessments often yield information that is surprising to the seeker. Be sure to note any unanticipated findings or results outside of your original objectives.

ASK YOUR COALITION TO HELP YOU DEVELOP THE SURVEY AND TRANSLATE IT IF NECESSARY.

DEVELOPING RECOMMENDATIONS

Recommendations are suggestions for future action to address the needs identified. Recommendations may be:

- Information oriented–What additional information is needed? What other sources should be tapped?
- Strategy oriented–What approaches should be taken to address identified needs? (Example: Should we create new services? Should we advocate for others to create services? Should we refer people to other sources?)
- Program oriented–What types of services should be provided and what products should we offer to address the needs? What resources are needed (i.e. bilingual materials, types of information, outreach, additional collaborations, bilingual staff)?

DEVELOPING PROGRAM OBJECTIVES

Program objectives are statements of anticipated changes in conditions or needs identified during the needs assessment process. They should flow logically from the conclusions and recommendations. Program objectives should be stated in specific, measurable or observable terms and be achievable within a stated time frame.

NEEDS ASSESSMENT FINDINGS

1. List the major needs identified in the assessment process.

_____

_____

_____

2. List recommendations that relate to each category of need.

_____

_____

_____

3. List resources available to the library and the community to address the need.

_____

_____

_____

4. Identify gaps in resources or services.

_____

_____

_____

5. State a condition that should exist (turn the statement of need into an affirmative statement of the desirable condition).

_____

_____

_____

6. Quantify the affirmative statement.

_____

_____

_____

7. State a time frame within which the objective should be achieved.

_____

_____

_____

8. State methods of evaluating the level of attainment of the objective.

_____

_____

_____

NEEDS ASSESSMENT EXTERNAL ANALYSIS CHECKLIST

What to look for and observe in your region or branch neighborhood:

A. Where is the library physically located in relation to other institutions?

- Physical geographic, landmark or historical boundaries
- City Hall, councilperson offices
- Community centers
- Social service agencies
- Large and small businesses
- Stores, supermarkets, mini malls
- Public, private and parochial schools; colleges and universities
- Parks, recreation centers

B. Within what planning districts, target areas does your region or branch fall?

1. **City of** _____
   - Community Development Department, Labor Market Planning Areas
   - Department of Aging, Aging Services Areas
   - Community Redevelopment Areas
2. **County of** _____
   (Supervisorial District)
   - Health Services Planning Districts
   - Public Social Services Districts
   - Housing and Community Development Districts
   - Children's Services Regions
   - Community and Senior Citizen Services target areas
3. **United Way Regions**
4. **Unified School District Regions/ Districts**
5. **Other**

C. Identify collaborative planning activities currently functioning in these districts.

_____

_____

_____

D. Demographic data.

_____

_____

_____

COMMUNITY FORUM PLANNING CHECKLIST

A. Preplanning

- Set meeting goals and objectives
- List key topics/issues to be addressed
- Develop a meeting agenda
- Schedule place; set date and time
- Develop publicity strategy

B. Publicity

- Identify segments of community that should be represented
- Send notices to service providers, community organizations, churches, businesses
- Send media releases to print and electronic media
- Distribute fliers
- Place posters in key places in community
- Send information announcements to organizations

C. Forum Management

- Arrange for facilitators/recorders
- Invite an influential member(s) of the target community to welcome participants
- Print programs for the forum
- Arrange for refreshments
- Arrange for equipment (microphones, flip charts, easels, pens, sign-in sheets, audio tape recorder, extension cord, overhead projector, other visual aids)
- Arrange for parking
- Arrange for transportation
- Set up adequate seating
- Develop and reproduce evaluation forms for participants
- Arrange for child care

"PFC is a point of pride for all Filipinos in our community, and for me, too!"

COMMUNITY ASSESSMENT REVIEW

From the time of your first community-based needs assessment, you need to consider how to set up an annual needs assessment process or system. Use external data sheets to review the information that exists outside of your library. As each person uses the sheets, different perspectives will be observed by each member of the team. Each will highlight what they may see from their own culture and values.

RECOMMENDATIONS

1. **When conducting needs assessment, do more than collect community data and facts about the target population.** Qualitative information about the target community's traditions, holidays, foods, and attitudes about the family, home, and religion helps the library understand and appreciate the community. It is also important to learn what "embarrasses people" so that you can avoid relating in a disrespectful, or embarrassing, manner.
2. **Include the partnership team and the library director in developing your needs assessment plans.** Your community coalition, or other community contacts, can also play a vital role in survey design, distribution, and translations.
3. **Community-based needs assessment takes time to plan, conduct and analyze.** Be sure to commit the resources necessary to do a quality job. Remember, there are no shortcuts.
4. **Begin the needs assessment with existing data sources to build support for your needs assessment efforts, but resist the temptation to rely on old data.**
5. **When conducting needs assessment, be sure to value input from individuals as well as agencies, organizations and businesses.**
6. **Needs assessments should be updated regularly.** Conduct community-based needs assessment on an annual or biannual basis.
7. **When creating new library programs and services, trying to serve two target populations adequately at the same time and with the same level of service is difficult.** It also tends to result in a lower level of service to one of the groups.
8. **Funding for new programs should reflect community needs.** Be judicious when planning a new service program to avoid resentment or a feeling of competition from other community populations. Offering what you cannot deliver and overextending your resources and staff will have a negative impact.

PLANNING

Planning is one of the most critical components in the Partnerships for Change (PFC) framework. Planning sets the stage for a course of action to prepare your organization for change. Strategic planning will provide your library with a vision, a mission, a purpose and goals, a service program leading to the fulfillment of the mission, and a method for procuring the resources needed to make the vision a reality.

Successful planning involves many key people inside and outside of your organization with an ultimate goal of incorporating change philosophy throughout the library. A good plan is both a structured and flexible document. The process provides a blueprint for making change happen within a system for modification, including continual re-evaluation and re-design components, based upon staff response to the changing needs of the community.

Planning is an essential tool in your efforts to transform your library into an effective change agent. This chapter includes a discussion on strategic planning; beginning the planning process with a mission and vision; a model for planning; a template for re-designing your service program and preparing an implementation plan; and concludes with a discussion of the critical next steps.

PLANNING IS AN ESSENTIAL TOOL IN YOUR EFFORTS TO TRANSFORM YOUR LIBRARY INTO AN EFFECTIVE CHANGE AGENT.

WHAT IS STRATEGIC PLANNING?

Strategic planning is the process of determining what an organization intends to be in the future and how it will get there. It is designing a desired future for your organization and finding the best way to reach that destination. Such planning involves fundamental choices about the future of your organization–choices about:

- Vision–an image of the future.
- Mission or goals you will pursue.
- Programs, services, or products you will offer to accomplish this mission.
- How you will attract and utilize the resources you need–people, money, expertise, facilities, etc.

A distinction is sometimes made in the planning literature between "long-range planning" which focuses on what and where an organization expects to be at the end of a given period of time, and "strategic planning" which focuses on the action plan for how the organization intends to get there. In practice, however, "where" you are going and "how" you will get there go hand-in-hand. Where you are going influences the strategy you select for getting there; your strategy (the "how") provides practical limits for where you can go. We will use the term "strategic planning" in a broad sense to refer to a process of determining both where you want your organization to be in the future, and how you will get there.

Strategic planning is also distinguished at times from another kind of planning–namely operational or short-range planning. Operational planning is what many nonprofit organizations do when they develop yearly goals, program plans, budgets, and work plans. Operational or short-range plans focus on a shorter time period than long-range strategic plans, for example, one year instead of five. Operational plans usually show in specific terms how, in the coming year, an organization will move toward the future described in its long-range plan.

Strategic planning involves assessing the strengths, weaknesses, opportunities and threats of any particular situation. This analysis can be used to summarize the major parameters and determine a course of action to improve your organization, staff, services and programs, and community collaborations and interactions. Strengths can be identified as your assets and what you do well. Weaknesses are those areas that need

FINDING THE FIT
Figure 1

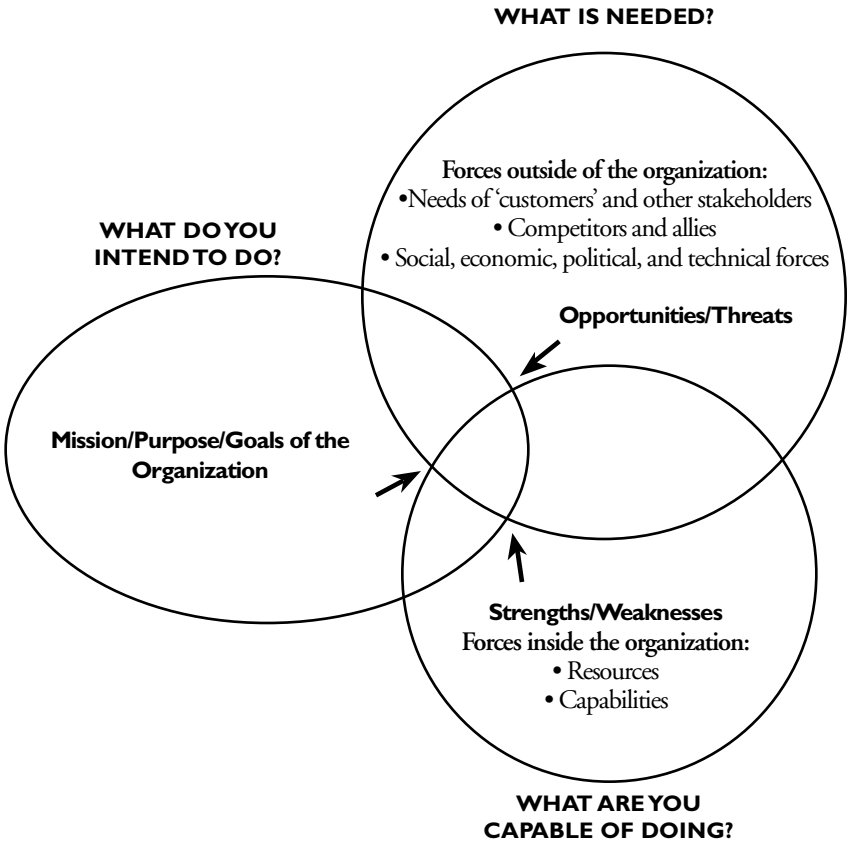

MODEL FOR PLANNING
Figure 2

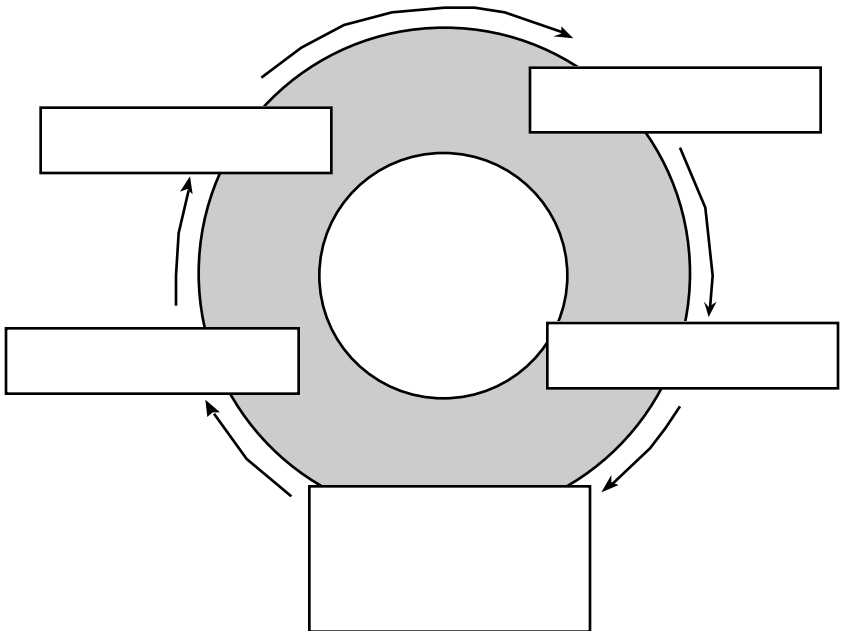

improvement or development. Opportunities can be situations, connections, or activities for advancement or enhancement. Threats are obstacles or challenges to success.

Strategic planning can also be viewed as finding the fit between three factors for your organization *(Figure 1):*

- What you intend to do: your basic mission.
- What exists in the world around you: opportunities and threats.
- What you are capable of doing: your strengths and weaknesses.

A good strategic plan will help you find the best fit in the coming years between what your organization intends to do, what will be needed in the world around you, and what you will be capable of doing. Experts also stress the following points about strategic planning:

- Strike a balance between idealism and realism. Set challenging, but doable goals for the future.
- Shape your planning process to fit your organization. No strategic planning process is ideal for all organizations. All organizations plan in some way, but the formality and structure of such planning varies.
- You are not finished with your planning when a plan has been drafted and approved. You have just begun. You will need to take action based upon your plan, monitor your progress, take corrective action, and update the plan in light of changing conditions.
- Remember that strategic planning is not an end in itself. It is simply a tool for guiding your organization toward its best possible future.
- Also remember that groups of organizations (associations, federations, and the like) as well as parts of organizations (divisions, programs, and projects) can do strategic planning.

WHY DEVELOP A STRATEGIC PLAN?

It will:

- Improve performance.
- Stimulate forward-thinking and clarify future direction.
- Solve major organizational problems.
- Build teamwork and expertise.

- Meet others' requirements.
- Become a natural way of doing business.

MISSION AND VISION: HOW THEY COMPARE

Mission

Your organizational mission provides the library's foundation. It is a template for what you want the library to become. The mission:

- describes the type and scope of services provided;
- explains why the organization exists;
- provides an organizational job description;
- identifies your stakeholders and/or customers;
- defines your service area;
- states or implies your organizational mandates;
- defines what makes your organization unique; and
- focuses on the present and future by stating your organizational purpose.

Attributes of the Mission

- It is meant to be spoken and read and discussed; it is meaningful.
- It is timeless.
- It is written to evaluate achievement.
- It is supported by staff and customers.
- It is shared throughout the organization.
- It is realistic, attainable and sustainable.
- It describes a range of services.
- It explains your uniqueness.
- It describes your customers and market.
- It is a guide to action.

Vision

The vision of the library is the path to attaining the mission. It is an action plan, a process in achieving the library's mission. The vision:

- states something far beyond what others think possible;
- includes an image of what one day can be made real;
- describes a realistic, credible, attractive future–a condition better in some ways than what now exists;
- looks forward with a clear sense of direction;
- evokes visual images because of the language used;
- emulates an ideal or standard of excellence; and
- creates the future by inventing it.

DEVELOPING AND COMMUNICATING A VISION

A vision is:

- An image of the future, although it may be expressed in the present tense.
- An ideal state, not a one-time goal. When you achieve the vision, it continues to motivate because maintaining it will always be challenging.
- A way to differentiate your organization.
- A reason for people to commit their best efforts and pull together in a common direction.

A clear, well-communicated vision does more than inspire passive followers. Rather, it draws the commitment of innovative individuals and teams who can contribute to the realization of the vision in original and creative ways.

THE VISION OF THE LIBRARY IS THE PATH TO ATTAINING THE MISSION.

PLANNING: KEY CONCEPTS

Mission:

A broad description of why an organization exists; its stated purpose. Time span should be at least five years (Figure 2).

Problem or Needs Assessment:

A description of the community in which your library program operates.

Goals

- describe the desired future;
- provide direction and guidance;
- serve as a planning umbrella;
- narrow the scope of the mission;
- usually cover a one- to three-year period;
- are based on internal and external data; and
- chart expected outcomes and changes.

Objectives

- have short-range, expected outcomes which will assist in achieving organizational goals;
- target specific results;
- are measurable;
- are achievable; realistic but allow some challenge or stretch;

- can be accomplished in a 12-month time frame;
- describe outcomes or results, not methods;
- describe who will benefit; and
- state time by which objective will be accomplished.

Action Steps:

The specific tasks and work activities necessary to achieve each stated objective; include what is to be done, who is responsible and when each step should be accomplished.

Funding/Resources Needed:

How you will acquire and use the funding, materials, personnel, operations and other resources necessary for your library to realize its mission and vision.

Implementation:

Putting your strategic work plan in action. Moving your library from where you are to where you want to be.

Evaluation:

Continual examination and assessment of the process and the results, incorporating changes as indicated.

THE PFC IMPLEMENTATION FRAMEWORK

The PFC Implementation Framework is a tool to help you clearly define a service program design that is responsive to your community needs. The framework will help you organize your thinking and resources to move your library toward that design in workable steps over a multi-year effort. It is intended to help you continually fit your PFC efforts into the overall structure and resources of your library organization and to revise that structure and resources where needed, all in a workable approach to help you control this change process rather than being controlled by it. You can use this document as a plan to work with library administrators and other stakeholders.

The PFC Implementation Framework includes information, descriptions and data on your environment, mission and goals, the proposed service program design, a plan to implement that design, an annual action plan, and a planning process statement.

The Environment includes:

- Community-based needs assessment (see chapter entitled "Community-based Needs Assessment);
- Local, state, and national trends and changes (e.g., recession, war, air quality, new mayor, state finances, etc.);
- Trends in librarianship (e.g., formal planning, library school curriculum, commitment to minority recruitment, etc.);
- Your competition (e.g., book stores, video stores, information brokers, other city departments, the Internet, etc.); and
- Your library's organizational structures; values; strengths, weaknesses, opportunities, threats; policies, procedures and the overall library/ branch planning efforts/plans, etc.

MISSION/GOALS

This is your long-range vision of what your branch should be doing to serve your community.

SERVICE PROGRAM DESIGN

This is an operational statement of your long-range vision (i.e., a blueprint of what you want your branch to look like). It describes what your branch's service program should look like to meet the mission and goals for your community. It is stated in terms of operations, behaviors, staffing, skills, procedures, policies and other areas that must be in place in order for your branch to be as responsive as possible to your community.

This operational statement should be as detailed as possible so that all people involved in the process have a clear picture of where the library is headed. It will certainly change over time as you test and refine the various parts of your proposed design through organized, workable steps outlined in the Implementation Plan.

IMPLEMENTATION PLAN

This shows how you plan to move from where you are to where you want to be (i.e., from your current service program design to your desired service program design). In many cases, more than one year is required for full implementation. The implementation plan is like a road map and should define what you will be trying to accomplish, across all of the years required, to fully implement a responsive service

program. It will change over time, as testing and experience help you refine your design. It will vary in depth also, with less detail for years farther into the future than for the current year.

The implementation plan includes the following, all projected over time:

- services/programs you intend to test and refine through experience (including a time line, proposal for staffing, and evaluation for effectiveness);
- public relations activities;
- plans for establishing and maintaining community linkages;
- proposed collection development changes within your branch/library; and
- changes in procedures, such as in bookmobile schedules and staff development efforts.

ANNUAL ACTION PLAN

The annual action plan is your detailed statement of what you want to accomplish in any one fiscal year. The action plan gives annual detail to your general implementation plan.

The action plan may be synonymous with an annual branch/library program budget. The action plan defines the objectives you wish to accomplish within the year, the activities to implement the objectives, your proposed scheduling of those activities, the measures you will use to monitor and evaluate your progress toward completion of your objectives, and a statement of the resources (staffing, materials, operating expenses, and equipment) you will need to complete the objectives for that year.

PLANNING PROCESS STATEMENT

This is your statement of what you need to do to maintain the responsiveness of the service program design. In creating this portion of the document, consider these questions in ensuring that the library retains its responsiveness (including a time line for each action):

- What kinds of informal and formal needs assessments are most effective?
- How will the library maintain community linkages and involvement?
- How will the library continue to refine its services as the population continues to change?
- How will your PFC concepts be incorporated into your overall library planning?

FOLLOW-UP PROCEDURES

It is necessary to establish procedures and a timetable to check the progress of the plan. This activity will tell whether the results are what were intended, and allows revisions that may be indicated in the plan. This means that those given the responsibility for the strategies of the plan are to submit reports on the various actions and outcomes to senior management. Along with this, recommendations for any further changes in the strategy to fine tune its effectiveness should be submitted. Initially this will be looked at as work in progress. Most strategies developed in service organizations will take time to begin to show change. The initial review will focus more on whether the activities were carried out and by whom, and within the recommended time frame. It may take as long as a year to begin to see whether the actions undertaken actually accomplish what was intended. The group may wish to assess whether the assumptions underlying the strategy held true and whether other issues were raised by the initiation of the strategy.

This process should include the following planning activities:

1. Evaluation–This is the time to account for what has been accomplished effectively. The organization will be able to determine what has been done and how far along it is in accomplishing its desired goals. This is the time to look for flaws that need to be corrected. The process of comparing actual performance with planned efforts is what takes place here. It involves self-criticism, and the discipline to make individuals answerable for their assigned tasks.
2. Revision–The information uncovered in the evaluation process is useless if it is not channeled back into the planning process. Revisions indicate that the plan is not something sacred, but is a document that incorporates the best judgment of what the planning group regarded as important. The future will not always conform to the prescription. Our actions do not always produce the desired results.
3. Communication–Although there is a formal aspect to this, communication also involves reporting progress toward completion to those individuals keenly interested in the

"PFC helped us decide to go outside the library to reach people instead of waiting for them to come find library services."

future of the organization. This includes staff, stakeholders, administrators and government officials, city and county management, customers and, when appropriate, the general public. This can take two forms. One is a communications plan that keeps individuals abreast of the implementation and successes achieved as a result of the strategic plan. Because we all have short attention spans, it is critical to let everyone know what their strategic quality plan has done for them lately. The communications plan should be focused both internally to staff and externally to stakeholder groups, all key decision makers and customers. A marketing plan can also be developed to support the strategic plan. The focus is on the "selling" of the plan and the library to customers and stakeholder groups.

MAKING A PLAN HAPPEN IS AS MUCH AN ART AS IT IS A SCIENCE.

Making a plan happen is as much an art as it is a science. It is important to remember that there is no "right way" to accomplish the successes outlined in the plan. Experience has shown that the single most critical factor is the active participation of those who will be asked to carry out the plan and be affected by the changes it outlines. Simply put, good planning reflects good management. This in turn increases the chances for success.

RECOMMENDATIONS

1. **Plan for incorporation from the very start.**
2. **Do not offer what you cannot deliver.**
3. **Be sure programs are focused, especially when you have identified several objectives from needs assessments.**
4. **Focus only on a few of the goals in the first year of the partnership.** This limited focus will help ensure success by not overextending goals.
5. **Involve key figures in your organization and community early in the planning process.** This will help to ensure buy-in of staff and community.
6. **Use planning to identify alternative funding sources and alternative service programs for future changes if needed.**
7. **Prepare a detailed action plan, including review and revision of existing policies that might provide obstacles to implementation, access or service plans.** Local planning is essential and can also affect other areas of library service.

INCORPORATION/RESTRUCTURING

Institutionalization of change refers to the degree to which change persists, continues or endures. An institutionalized act is defined as a behavior that is performed by two or more individuals, persists over time, and exists as a social fact–behavior that is not dependent on any particular individual.

Perhaps one of the most challenging steps encountered in the Partnerships for Change (PFC) process was that of incorporating the philosophy into the infrastructure and methodology of overall library operations. Restructuring the library organization to prepare for and embrace change can be a daunting task.

Depending on local circumstances and the changes being made, service changes and their incorporation could take one, two or more years. It is important to begin preliminary incorporation planning very early, even though changes will have to be made to any initial plans.

This chapter focuses on tools to assist you in preparing your library for the commitment of incorporation and the upheaval of restructuring. It includes a useful and thought-provoking questionnaire to analyze the steps the library needs to take to incorporate change; a detailed examination of your service program using the PFC philosophy; and a budget worksheet to fund the changes the library wishes to make.

YOUR CURRENT SERVICE PROGRAM WILL NOT REMAIN THE SAME IN A CHANGING ENVIRONMENT.

INCORPORATION PLANNING QUESTIONNAIRE

1. Define your target population(s) by ethnicity, gender, economics, age, etc. For example, your overall target population may be Hispanic; however one segment might be Hispanic children, 11 to 13 years old, who are non-English speaking.
2. Describe what you want your revised service program to look like, in terms of the following elements, after the changes you propose are fully incorporated into your ongoing service program.
   a. Services added, eliminated; reduced, modified
   b. Staffing (number, make-up, skills, languages, etc.)
   c. Changes in your library environment (organizational structure, physical design/ layout, bilingual signage, etc.)
3. How long will full implementation and incorporation of your proposed service program revisions take? Develop a general time limit and indicate steps or milestones.
4. Consider what magnitude of service revisions you can realistically fold into your library budget over a reasonable time period. Does your proposal for changes reflect this reality?
5. What proportion of your ongoing library materials budget needs to be allocated to materials acquisitions for your target group? Is it realistic to expect that you can maintain this level?
6. Remembering that communities rarely remain static, consider how your general community (of which your target group is a part) is likely to change over the time that it takes to revise and incorporate services for your target group. How might you try to accommodate any of these changes that are significant?
7. How will you work with organizations and individuals in your community?
   a. Throughout this effort to refine your service program?
   b. Into the future for help in your ongoing efforts to maintain service responsiveness as your community continues to change?

SERVICES, STRUCTURES, AND OPERATIONS

Change requires a commitment from your organization in terms of funds and allocation of services and programs. Your current service program will not remain the same in a changing environment. Sustainable change requires modification. Your organization must make hard decisions about which services and operations to maintain, modify, or eliminate if the library is to add or develop new programs. This chart will assist you in reviewing key components of your current program and determining where changes need to be made. Please note that the elements are not prescriptive; this chart is a starting point for examination and you should include all of your library's services and operations.

1. **Services/Programs Added, Eliminated, Reduced, Modified**
   - Children
     - Programming in library
     - Classroom visits in library
     - Library staff visits to schools
   - Young Adults
   - Adult Programming
   - Information Desk
   - Circulation/Overdues
   - Reserves
   - Reference
     - Desk
     - Online services
   - Literacy
     - California Library Literacy Services (California Literacy Campaign)
     - Families for Literacy
     - Other
   - Bookmobile or van
   - Outreach
   - Interlibrary loan
   - Interlibrary reference
   - English-as-a-second language
   - Audiovisual
   - Public-use personal computers
   - Internet
   - Meeting rooms
2. **Materials Collection**
   - Materials budget
   - (How much? How allocated? What type materials? What languages?)
3. **Staffing**

   Do you have bilingual and bicultural staff? Do you have staff who reflect the community you serve? Do you offer bilingual pay to employees?
4. **Marketing and Public Relations**
   - Communications/Public Relations/ Marketing
   - Signage
     - In-library
     - Out of Library
   - Library brochures (specify)
   - Library orientation
   - Outreach
5. **Library Environment**
   - Physical facilities
     - Amount of space: total square footage
     - Amount of space: public square footage
     - Arrangement
   - Service hours
   - Community meeting room(s)
   - Visibility
   - Accessible to public transportation
   - Parking
   - Number of volumes/titles
   - Number of magazine subscriptions
6. **Ongoing Needs Assessment, Community Participation, Change Processes.**
   - Outreach contacts
   - Meetings
   - Programming
   - Annual community review/needs assessment

BUDGET WORKSHEET

Most budgets are based on fixed resources. In preparing a new budget for a revised service program, you will have to delete, modify, or reallocate resources or find new revenue sources. You will be working with the library director, the business office, the personnel department, the foundation, Friends groups and other key internal and external library stakeholders. This worksheet will help you think about some common questions to determine those changes. The items specified are typical budget categories.

Indicate what resources will be required to sustain the change. Remember that implementation will require more investment of resources; maintenance of ongoing effort will require less investment.

What is needed in your particular program to institutionalize the changes you are making?

1. Additional dollars? How much?
2. Addition of other resources? Not connected to additional dollars? Which ones?
3. Different allocation of existing branch dollars and other resources?

BRANCH BUDGET PLANNING FORM

- Branch/Library _____

Resources Required to Support Revised Service Program Design	Total Cost
• Salaries and Benefits (Classification and Number of Full-time Employees)	
• Materials (Types/Amounts)	
• Operating Expenses (Types/Amounts)	
• Equipment (Types/Amounts)	
• Other Budget Categories (Specify)	
• Totals	

"Now I have the methods to go with my commitment. PFC concepts like community needs assessment are now an integral part of how I do all my work. And I've become much more politically savvy."

RECOMMENDATIONS

1. **Integrate the PFC philosophy into the mission and goals statement of the library.** This establishes its importance and helps to ensure the ongoing effort.
2. **Maintain ongoing communication with staff in branches and the library jurisdiction.** This will create awareness and help to ensure buy-in for incorporation.
3. **Analyze and revise, as necessary, the policies of the library in order to provide the best, reasonable jurisdictional support for the service program revisions.**
4. **Use needs assessment as a tool to support incorporation and a revised service program supported within the library's baseline budget.**
5. **Focus on visible program elements system-wide.**
6. **Seek the library director's ongoing support of and involvement in local program efforts.**
7. **Look closely at redesigning current services to incorporate new services.** Be sure that the program redesign is manageable, realistic, and that the new services provide for minimal funding impact. Focus on realigning current services to incorporate the revised service plan. Your plan may include a restructuring of branch hours to be open at times most convenient for the target population.
8. **Develop a program structure that allows for changes in staff and community partners.** This will ensure continuation if key individuals leave. Staff turnover can have a negative impact. Maintain structure and crosstrain to achieve maximum effectiveness for continuity of philosophy and program design. Incorporate all staff in program design and evaluation.
9. **Empower and train all staff, and particularly front-desk staff, to achieve maximum effectiveness in the restructuring process.**
10. **Revitalize the community partner commitment.** Recruit new members, implement a policy limiting the time any one individual can serve, stagger terms of coalition membership, regularly sponsor coalition appreciation events.
11. **Develop a good training program which identifies its intent and focus, involves all staff, has ongoing elements, helps to provide effective service and promotes buy-in from staff not directly involved.**
12. **Reallocate collection development funds to areas of greater need or to areas where you had no collection before (e.g., resources in a language previously uncollected by your library).**

PUBLIC RELATIONS

Today, when public libraries are expected to do even more with less, marketing and public relations play an increasingly important role in enhancing libraries' visibility and their perceived value to the community. A library whose value is well known to the community is more likely to be secure in its funding.

Public relations (PR) and marketing are also key to attracting new library users. Creating a high profile for the library is critical to increasing usage and that means taking advantage of every opportunity to promote use of the library and ownership of a library card. Marketing and public relations includes essentially everything you do to keep a patron, or attract a new one.

For the most part, library public relations and marketing efforts have been modest at best. For many librarians, public relations and marketing are alien activities, so much so that in many libraries, public relations and marketing are disguised as "outreach." While many librarians may say, "Public relations is not my job," the fact is, public relations and marketing are necessary components of effective library service. Many individuals and organizations–not just librarians and libraries–feel that "selling" by nonprofit organizations is distasteful. Finally, because many libraries enjoy a unique relationship with their loyal patrons, they feel little need to promote their services. As a result, many libraries have fallen into a passive public relations orientation. In today's world of shrinking budgets and changing communities, libraries can no longer take a hands-off approach to public relations.

FOCUSED OUTREACH LED TO INCREASED LIBRARY AWARENESS BY PATRONS.

Building community awareness and support, and becoming a regular positive focus for the local media takes time, energy, knowledge and skills. When the Partnerships for Change (PFC) Program first began, the librarians and community people involved were skeptical of the value of engaging in public relations. But as they learned PR techniques and honed their PR skills, they began to understand the powerful impact that public relations can have. They conducted their public relations efforts in different languages; they began to view outreach as a necessity; and they learned the value of bilingual signage and bilingual promotional materials. In the 1999 Survey of PFC branches, 88 percent of the respondents indicated that public relations was still being practiced in their library.

Focused outreach led to increased library awareness by patrons from both the targeted and non-targeted communities. Outreach efforts included articles in local newspapers, radio and TV coverage (especially in media serving the targeted community), bus stop bench advertising and banners to highlight the library's location, on-site visits to local schools, attractive fliers and posters, bookmarks, newsletters, pens, pencils, plastic bags, refrigerator magnets, T-shirts and calendars. Library staff also participated in local community festivals and fairs, providing opportunities for promotion and outreach on an ongoing basis. Public relations played a key role in the success of these targeted outreach efforts.

In this chapter, you will learn about: internal and external public relations; elements of effective public relations; how to get the word out; the importance of personal contacts; how to do media relations and special events; how to manage, monitor and measure your PR activities; how to write for the news media, and work with radio and TV; how to develop a library services brochure and newsletter; how to develop effective library signage; and how to hire PR consultants and graphic designers.

Private enterprise never stops public relations and marketing efforts because they do not want people to stop buying their products and services. By developing your public relations experience and knowledge, you can discover effective ways to reach new library users and, at the same time, increase public understanding of the value of library services. Ultimately, public relations can also help you increase–or at least sustain–financial support for those services and programs.

WHAT IS PUBLIC RELATIONS?

Public relations is a promotional means of helping your institution meet its goals and objectives. Its purpose is to familiarize, educate and inform present customers, potential customers, members of the community, elected officials, staff and other constituencies, and the media about your products, programs and information services.

PUBLIC RELATIONS IS A PROMOTIONAL MEANS OF HELPING YOUR INSTITUTION MEET ITS GOALS AND OBJECTIVES.

FOUR BASIC STEPS TO PUBLIC RELATIONS:

1. Research
   - What are you trying to accomplish?
   - Who do you want to reach? Who is the target audience?
   - What are your staff/management attitudes?
   - What are your library's strengths/ weaknesses?
2. Planning
   - Pro-active rather than reactive: "preventative PR" rather than "crisis PR"
   - Decide on special events and leave plenty of time for preparation (printing, special signage/artwork, publicity, etc.).
   - Decide on goals and measurable objectives.
3. Communication
   - Match PR tasks to your objectives.
   - Decide who will carry out each task.
4. Evaluation
   - What worked and what did not?
   - What deadlines weren't met and why?
   - Did staff get enough direction and support?
   - Did you reach your target audience?

INTERNAL PUBLIC RELATIONS

1. Communicate your library's goals to managers, staff, coalitions, and boards of trustees or library commissioners.
2. Involve your library staff in PR.
   - Hold regular informational meetings about what is going on.
   - Brainstorm with staff to key into their creative thinking.
   - Involve staff in planning process.
   - Utilize special talents of staff members.

EXTERNAL PUBLIC RELATIONS

1. Network with community organizations.
2. Get involved in the community and build credibility.
3. Include an ethnic representative on your team to ensure cultural sensitivity.
4. Identify the right spokesperson for different audiences.
5. Develop a newsletter–they are valuable communications tools and relatively easy to produce by computer.
6. Develop and maintain an accurate database of names and addresses for a good mailing list.
7. Develop bilingual and multilingual signage in your library if you are targeting people who do not speak or read English.

PUBLIC RELATIONS OBJECTIVES

Ethnically targeted public relations and marketing have several objectives. They include:

1. Demonstrating Cultural Sensitivity: The United States has become a multicultural society. Companies and organizations which ignore cultural diversity do so at the risk of becoming exclusive or obsolete.
2. Corporate and Institutional Positioning: Relationships, including business ones, are based on trust. Establishing credibility, a sense of closeness to the community, is becoming more important. It has also become important to become part of the solution, not part of the problem.

3. Brand Awareness and Loyalty: The old assumptions about brand loyalty no longer hold true. Newcomers can gain market share through aggressive marketing and public relations. Established brands and institutions must fight to hold onto and increase their market share.
4. Direct Product Sell or Service Usage: Public relations has greater credibility and impact than advertising. Public relations extends the reach of advertising and promotion. Public relations also supports marketing objectives.

ENGAGING IN TARGET-GROUP RESEARCH

It is important that you learn the attitudes, beliefs and expectations of your target group in order to meet their needs for information and services. Good target-group research will help you identify appropriate information channels, community organizations and networks, and the desired benefits your program should offer.

Target-group research is also a great place to test your beliefs about your target group, their needs, expectations and beliefs. Sometimes what we think is not what the target group thinks. Target group perceptions are far more important than our own in program planning, public relations and marketing.

ELEMENTS OF EFFECTIVE PUBLIC RELATIONS

Companies, organizations and institutions with the strongest market presence generally have:

1. A Positive Organizational Attitude: Diverse markets are opportunities, not burdens. You must view different markets as segmentation opportunities for your library. Involvement in an ethnic market is a reflection of a company's or organization's sophisticated marketing approach.
2. Senior Management Involvement and Commitment: This includes a commitment to establishing dominance in the information marketplace and a willingness to communicate this attitude down the line to all library staff. This also includes visibility in the community.
3. Ethnic Personnel: Ethnic representation at all levels is needed because it gives you the opportunity to become more visible and credible.
4. Public Relations and Community Relations: Know the issues, the key players and the organizations that serve your target audience. Implement your programs seriously. Be people-oriented and publicize your community relations.
5. Advertising: When doing any advertising, consider the overall image of your library. Utilize both electronic and print media. Involve staff and community people in your library's advertising efforts.
6. Marketing: Utilize a variety of organizational resources. Recognize the market is in need of consumer information. Take your program directly to the consumer.
7. Long-Term Objectives: Do not expect instant results. Anticipate some form of program for an indefinite period of time. Be flexible enough to change with the market.

PUBLIC RELATIONS METHODS: THE ELEMENTS OF YOUR PLAN

Several public relations strategies and methods will be the basis for your marketing/public relations plan. Choose your strategies and methods wisely. Eliminate those you and your team cannot do well. Then create a budget for each. The budgeting process will also help you eliminate those your program cannot afford.

PERSONAL CONTACTS

How do you know whether or not your customers have enough information about your program to spread the word knowledgeably? One way is to tell them yourself. The way you run your program makes a strong statement. But you also need to give your clients information that lets them judge the quality of your program for themselves. Let your own genuine good feelings about what you do be so pervasive that your clients immediately pick up on them. Communication (oral when possible, written when not) should be built into your PR and marketing plan.

IT IS IMPORTANT THAT YOU LEARN THE ATTITUDES, BELIEFS AND EXPECTATIONS OF YOUR TARGET GROUP...

Here are some tips to help you make the most of those personal contacts:

1. When you know enough about your target audience, you can present your program's services from your customer's point of view.
2. Some people do not like to be pioneers, so mention the acceptance of your program's services by others, especially people in their community.
3. Emphasize what your service benefits can do for your prospect, not what they can do for the general market.
4. Be proud of your services, benefits and offerings. Convey your pride with facial expressions, tone of voice, selection of words. Feel the pride and let it come shining through!

...WORD-OF-MOUTH ADVERTISING CAN BE THE MOST EFFECTIVE FORM OF ADVERTISING.

WORD-OF-MOUTH ADVERTISING

In their book, *Marketing Without Advertising,* authors Michael Phillips and Salli Rasberry talk about word-of-mouth advertising. They concur that word-of-mouth advertising can be the most effective form of advertising. But, they add, it is just as good at spreading the bad news about your business, program or organization as it is about spreading the good news. The Ford Motor Company estimates that a dissatisfied car owner tells 22 people, while a satisfied car owner tells eight that she is pleased. When you devise a marketing and PR plan, be prepared to handle more customers. If your program and library are not ready for expansion, an influx of new clients can easily produce a waking nightmare complete with dissatisfied patrons, low employee morale and a general frustration of not being able to provide good service.

Also remember that positive word-of-mouth advertising often results from a combination of marketing and PR methods, including newsletters, posters, brochures, public service advertising, print and broadcast media coverage and more. But it is the mouth that gets the credit.

MEDIA RELATIONS

Effective media relations can mean positive publicity for your program. Positive publicity can impact not only your target audience, but your key contacts, referral sources, coalition members and businesses who may be willing to provide financial or other support for your library program.

Effective media relations can include using media releases, fact sheets, newsletters, fliers, photographs, personal letters and contacts. Invest time in developing good contacts with both general and ethnic media. Commit to issuing regular media releases which are informative, interesting and timely. Use fact sheets to detail lots of information or listings, like a listing of new Spanish-language magazines or books that you've added to your collection.

And remember, by far, the major marketing method used by small business is still newspaper advertising. And many newspaper readers read the ads almost as intensively as they read the stories.

SPECIAL EVENTS

Although special events are nothing new, more and more businesses and nonprofit organizations are turning to special events as a way to attract public interest, publicity and to make money. Plus special events are excellent ways to tie into your community's ethnic celebrations. Here are some tips on special event planning:

1. Plan carefully and well in advance.
2. Strive for quality.
3. Read and research everything you can about the subject or theme of the special event you are creating.
4. Form a committee because you will need lots of help to be a success. But you should still be the one who is in charge and responsible for coordination.
5. Check your community's calendar to be sure your event does not conflict with another that targets the same audience.

COMMUNICATIONS PROGRAMS

These can include everything from print materials to audiocassettes and videos. Whatever format you choose to help communicate the details of your program, make sure you have the skills and budget to execute it well. A poorly designed brochure that is confusing to read will not have much impact. A poorly written newsletter will not get the attention your program deserves. A poster with a bad photo is worse than no poster at all. Strive for excellence in all your communications programs. Be sure to proofread written communications.

SIGNAGE

This is an underestimated marketing tool that can truly make or break your program's public relations success. All the positive publicity or promotion in the world cannot help your program succeed if your target audience has trouble finding you or the resources you have purchased for them. Be sure that your signage–city street signs, exterior and interior signage in appropriate languages–is in place before you begin publicizing and promoting your program. Have all your program signage in place before you employ other marketing methods to get new clients to your library.

MANAGING LIBRARY PUBLIC RELATIONS

The success of your public relations efforts frequently rests on your personal contacts with people–the people on your library staff, the people in your coalition, the people who work for the media, the people who make organizations work, the people in your target audience. Personal contacts are the cornerstone of public relations success, especially in a grassroots campaign.

How do you manage your personal contacts? Have you defined the people you need to keep in touch with? Have you identified ways to stay in touch with them? Have you made a commitment to do so? Who knows about you and your library's program?

ESTABLISHING A NETWORK OF KEY COMMUNICATORS

Key communicators are people who talk to–and are believed by–lots of people. They are also people who can provide valuable assistance or support for your program and its goals. They can be invaluable when you are working with your target group. Here's a plan for making the most of your personal contacts.

1. Start by identifying key communicators and contacts. They might include members of your coalition, library management, city government, ethnic media, and people in organizations who serve your target audience.
2. Next, identify opportunities for personal contact–staff meetings, coalition meetings, community events, special events in the library.
3. Match key communicators to opportunities, and make a plan for the months ahead.
4. Use personal notes to stay in touch when you have missed a chance for a face-to-face meeting. Let coalition members know they were missed at a meeting. Thank people for expressing support for your program at meetings, even if you were not there. Thank the media for their coverage. Thank photographers for photos. Thank staff for going the extra mile. Thank your boss when you get his or her support.
5. Keep a calendar of contacts you want to make or use a tickler file so you do not miss opportunities.
6. Document your successes.

PUBLIC RELATIONS PLANNING

There are dozens of public relations and marketing activities you can engage in to ensure your program's success. Do not think you can engage in all of them or that you should. Even Fortune 500 companies engage in only about 30 of the tactics we suggest. Select the activities you feel comfortable with and that are within your library's and staff's capabilities and your program's budget. Try these activities first. Which activities you use (and when) will have an impact on your program budget, so prioritize the activities with dollars and staff resources in mind. The most important thing to remember is that your public relations activity must be ongoing to be effective.

LONG-TERM PUBLIC RELATIONS INVESTMENTS

- Cultural sensitivity training for library staff (a service element that impacts your public relations effectiveness)
- Survival language skills training for library staff (another important PR-related service element)
- Program logo
- Exterior signage
- Interior signage system
- Bookmobile and book van signage
- Audiovisual aids
- Decor, furnishings
- Brochures on library services
- Newsletter formats
- Posters promoting the library/program goals

PERSONAL CONTACTS ARE THE CORNERSTONE OF PUBLIC RELATIONS SUCCESS, ESPECIALLY IN A GRASSROOTS CAMPAIGN.

- Your program name
- Your public relations plan
- Your public relations calendar
- Your hours of operation
- Your phone demeanor
- Your cultural sensitivity
- Your coalition
- Your word-of-mouth referrals
- Your community involvement
- Employee recognition
- Research studies and surveys
- Service
- Tours of the library

FREE LIBRARY PUBLIC RELATIONS ACTIVITIES

- How you say hello and goodbye
- Media savvy
- Ample and free parking
- Access to public relations materials
- Credibility
- Being easy to do business with
- Testimonials
- Imagination
- Personal letters
- Tracking system to determine where new patrons come from
- Public speaking engagements
- Public affairs programming appearances
- Letters to the editor
- Public relations insight
- Neatness, cleanliness (outdoors and indoors)
- Program volunteer base
- Inviting atmosphere/environment

LOW-COST PUBLIC RELATIONS ACTIVITIES

- Welcome signs and visuals (flags, banners)
- Displays and exhibits
- Name tags for staff
- Media contacts
- Library participation in community events
- Designated public relations person
- Patron satisfaction surveys
- Reprints of publicity
- Blowups of publicity
- Workshops on library services
- Mailing list of target group community organizations
- Newsletters
- A library column in a local publication or a weekly program on the radio
- Fliers or bookmarks
- Public service announcements
- Media releases

PUBLIC RELATIONS ACTIVITIES THAT COST MORE

- Translators
- Library program brochures
- Photographs
- Special events
- Bus boards and bus bench advertising
- Advertising in target-group print and broadcast media
- Billboards
- Advertising specialties and giveaways (book covers, book bags)
- Newspaper inserts and preprints
- Videos on library services
- Direct mail postcards or door hangers

MONITORING AND MEASURING: RESEARCHER'S TOOL KIT

To help you monitor and measure the effectiveness of your public relations activities, here are several activities that can help you measure the results of your public relations work.

Circulation data–Measure circulation of new collection materials added for your target audience. Tracking these figures will help you monitor and measure your new collection activity.

Language-appropriate patron satisfaction surveys–These give patrons a chance to tell you how you are doing. They should be written specifically to your target market (i.e., children, teens, seniors, Hispanics, etc.). How can you improve your service? What materials did they have trouble locating? What new services or information could the library provide? What services need to be improved? What brought

them to the library? Surveys should be short, with a few open-ended questions, and they should be tabulated weekly or monthly. Many times, such surveys can help you identify problems before they get out-of-hand. They can also help you identify new ways to serve your target community.

Incoming mail–Use mail coming into the library to detect attitudes of your key publics. You can discover positive and negative attitudes, lack of information, a failure of your message to get through, agreement with your policies, etc. Remember that letters often come from people who have an ax to grind, so do not take the results of this approach to be a scientific reading of your publics.

Personal contacts–One of your chief skills in promoting your library should be the ability to get around and size-up people who are important to your work. Meet regularly with editors, reporters, ministers, community and civic leaders–the formal and informal power structure in the community. You'll need to identify influentials and know how to reach them.

Systematic observation–Use this technique to observe the number of people who attend events and programs or the behavior of your target group. Observe first-hand audience reaction during tours and presentations, take counts of attendees to special programs and events, check changes in behavior in response to new activities (bilingual signage, expansion of your library's collection, new services, etc.).

Advisory committees–You may want to create ad hoc committees or task forces that advise about a particular issue and then go out of existence. Or they can be permanent committees that stay around and offer ongoing advice. It's important that members continue to represent your target audiences. Their opinions will not be scientific but will offer more to work with than just a guess. If you are conducting a persuasive campaign or creating program materials, the committee's opinion may mean more to your target audience than your own opinion or even your supervisor's.

Field agent reports–Often people working in the field (at satellite library sites or bookmobiles) are closest to the target group and activity. If they are trained listeners, they should be able to provide you with both positive and negative feedback on your program activity. Make certain they report regularly, cover all the items you think are important, and that they present a balanced picture.

Listeners–Encourage employees to join local service groups and target community organizations. Ask employees to report on key issues discussed at meetings and new contacts they make.

Focus groups–These are not just tools for your initial research. You can continue to use focus groups made up of members of your target community to ask questions about your programs, publications, special events, results of surveys, and image in the community. Note changes from what you learned in your needs assessment research. You can also use focus groups to get target audience reactions about logos, brochure copy or proposed special events and library programming. This technique is not purely scientific, but it can provide lots of valuable information.

Readership surveys–If you are using a newsletter to communicate regularly with your internal and external audiences, you will need to assess its effectiveness. Readership surveys can help you check readers' attitudes about the content. What information did they find most useful? What information did they find least useful? Do they read it thoroughly, or just scan it? Do they pass it along to others? Who? Is the amount of information appropriate? Are the kinds of information offered appropriate? What you learn can help you adjust the content, style and graphics of your newsletters to ensure their effectiveness.

Tracking media placement–Keeping track of column inches of print publicity and minutes of electronic media exposure to targeted audiences can help prove the worth of your communications efforts. It is important to track your media hits–the number of times your media releases generate publicity.

ENCOURAGE EMPLOYEES TO JOIN LOCAL SERVICE GROUPS AND COMMUNITY ORGANIZATIONS.

ANALYZING THE MEDIA

To make sure that your story and angle are right for the media you are approaching for coverage, it is important that you analyze the content of their publications or broadcasts. Start by studying the media. You want to look at three

or four issues of a publication (or listen to or watch a broadcast program at least three times). Look at (or listen to) each story or program and decide where it came from. See if you can figure out the angle a publicist could have used to interest the editors, reporters or news directors.

Once you understand the kinds of stories and angles a particular media is looking for, you can approach them with your library's story using information and an angle that will interest them.

WRITING FOR THE MEDIA

When writing for the media, you must do two things: have your facts right, and follow the rules of the written word–spelling, grammar, punctuation, and style.

You have to know and practice the rules for the written word because the media deal in words.

"PFC helped me get better acquainted with my staff and my community and I developed better management skills."

HOW TO WRITE FOR THE NEWS MEDIA

1. Avoid propaganda–A slanted perspective violates objectivity.
2. Share the spotlight–By networking with other library programs, the media can run a "roundup" story covering how several libraries are responding to California's changing demographics.
3. Ask "who cares?"–Who is affected by what you're saying in your media release? Are you showing how they are affected? Are you explaining the effects so that they're understandable in a personal way?
4. Use quotes–They add life to your copy and help illustrate the human element of your story.
5. Go after a specific story –not just "a story." Being specific about what kind of story you want and what you want to achieve helps you stay on target. If you know the specifics of your story, you have a better understanding of what information, facts and quotes you need to offer to get that story.

WORKING WITH RADIO AND TV

The print media and electronic (or broadcast) media have different needs. Do not expect the same materials you use for print media to work with the broadcast media. Here are some tips for working with radio and TV:

1. Check with radio and TV producers about their specific needs. Are radio reporters interested in phone interviews? Is a TV station interested in slides or video (usually with no sound)? Know what your local media want and deliver it.
2. Attribute quotes at the beginning of a sentence instead of in the middle or at the end.
3. Write for the ear. This means using simple language, focusing on one thought per sentence, and using the present tense. For every 10 seconds of radio, you can use 17 to 20 English words; for every 10 seconds of TV, you can use about 20 English words (depending on the number of syllables in each word). Whatever language you use, read your copy aloud and time it.
4. Use verbs in your copy. Listeners need verbs to enhance listenability and comprehension.
5. When trying to reach TV producers, think visually. What photo opportunities exist in your program? Special events? Special programming? A human interest story showing how your library program helped someone change his or her life?

Several things can help you manage your media relations and publicity opportunities. These include:

1. Media list development and maintenance
2. Story idea brainstorming
3. Thank you notes to editors, reporters, photographers and producers
4. Adding media people to your newsletter mailing list

TIP SHEET: WORKING WITH THE MEDIA

1. Have more than one media list. Put print media editors, columnists and reporters on one list, radio and TV public affairs program producers, and radio and TV news directors on different lists. The materials you send to each list should reflect the needs of that media and that person's area of responsibility.
2. Don't send every release to everyone on the list. Target and customize your approaches to each media as much as possible.
3. Send new promotional materials to the media. Your new program brochures, bibliographies, and newsletters may trigger a story idea, or at least, keep your library name in front of the media.
4. Always list a contact person with his/her day, evening and weekend phone numbers. News organizations do not keep regular hours, and many times a reachable contact person keeps a story opportunity from slipping away.
5. Use people in publicity photos. To increase the chances of your photos being used, choose candid, action shots and focus on faces whenever possible.
6. Don't call reporters to see if they received your materials. You can, however, call to offer additional information, or invite them to visit your library.
7. Be sensitive to deadlines before calling. A reporter or editor on deadline doesn't have time to talk with you. Find out about deadlines and respect them.
8. Realize that the media are not there to serve as cheerleaders for the library or any other organization. They are looking for stories with substance, and sometimes, they have to ask tough questions. Don't take it personally when they do.
9. Build trusting relationships with the media. Trust is the cornerstone of a good relationship with the media. If you can't answer a question, offer to get the answer and then do it.
10. Understand which media your library's target audience uses, and focus on them. Which TV programs, publications, radio programs does your target audience see, read and hear? If you target your media relations, you will be investing your time and resources in the publicity that will do you the most good.

MEDIA RELATIONS CHECKLIST

BEFORE seeking coverage of a story or event:

1. Read periodicals (the ones you want to cover your library programming) regularly and thoroughly so you know what kind of stories and events they cover.
2. Listen to and watch TV and radio shows for content and tie-ins with your library's story.
3. Identify the demographics of your target audiences and research which media outlets (TV and radio stations, daily and weekly newspapers) also target your audiences.
4. Use *Chase's Annual Events* to create media interest. Every library jurisdiction should have a copy. It's a tremendous planning tool for special event tie-ins and information on what other events are taking place at the time you are planning your library's event.
5. Have at least two other people read your media release aloud, and revise when necessary.
6. Regularly update names of contact people on your media mailing lists.
7. Get acquainted with the reporters at local ethnic media stations and publications.

WHEN seeking coverage of a story or event:

1. In your media release, list the most important facts first with complete details following.
2. In the upper left hand corner of your media release, list the name and phone number of a contact person. Be sure to give phone numbers where someone can be reached at any time. If necessary, list the contact person's home phone number. Never list the library's main phone number if it is answered by a machine!
3. Give the person who answers the phone at your branch complete details about the story or event so they can answer reporters' questions, or tell them who the contact person is or who the spokespersons are.
4. Type your release on one page if possible, double-spaced, using one side of the paper only. Have "MORE" at the end of the first page if the release is longer than one page.
5. Use # # # # # at the bottom of the last page.

6. Put together an effective media kit. Include a well-written media release, background information, a fact sheet, copies of any important publicity, names and phone numbers of a contact person, spokespersons or individuals available for interviewing. Be sure to get everyone's approval to release their phone numbers and brief them on the story and the media you're contacting.
7. Always keep a copy of your release for the file and another copy for the person answering the phone at your branch.
8. Start getting and collecting good photographs (5-by-7-inch black-and-white glossies are best) that can be supplied to the media for their use with the story.

"PFC helped me become a leader."

AFTER you send a release:

1. Carry phone numbers of all media contacts to whom you have sent the news release. If a reporter or TV editor on deadline calls but leaves no number, you will be able to respond in a timely manner even if you're away from your office or library.
2. When interviews are scheduled in advance, send confirmation letters to the reporter or producer verifying the day, time and place of the interview.
3. If an editor or reporter says he or she is not going to cover your story, accept their answer without arguing. Simply say, "Thank you for taking the time to talk with me," and remember there will always be a next time. You will want that editor to take your calls then.
4. After any media coverage for your library, write a thank you note to the editor, reporter, producer or host.
5. Save copies of all publicity and review them for what you can do better next time. Keep a scrapbook to document your publicity successes.

DEVELOPING EFFECTIVE PUBLIC SERVICE ANNOUNCEMENTS

A PSA–Public Service Announcement–is an announcement broadcast on radio or television of an upcoming event or program sponsored, funded or endorsed by a nonprofit group or organization. A good foundation for PSA planning is to survey radio and television public service directors to find out their production criteria. If your PSA is to be preproduced (produced on videotape or audiotape), some radio stations want cassettes, others want the PSA recorded on reel-to-reel tape.

Television station criteria can vary as well. They all have very specific criteria for length and format. When you provide a slide and copy for a TV PSA, be sure to use a horizontal slide for the television screen.

PSA CONTENT/WRITING STYLE

Remember that you must give complete information in a very short period of time. Most PSAs are no longer than 30 seconds and must answer the basic who, what, where, when and why questions. But you must also make it sound interesting and compelling enough to get people to fulfill your goal whether that goal is getting them to attend an event, support a cause or donate money.

RESEARCH THE POSSIBILITIES

Are you going to submit preproduced spots? Determine the feasibility and budget before you decide. If you have a relationship with a radio station or a recording studio, they may donate their services to help you produce the spot. Because of the production costs involved, producing a TV spot yourself is usually not a consideration unless production assistance is donated.

Television stations usually have very long lead times for PSAs–even if you are just submitting a slide and written copy. You should plan to have your PSA ready and delivered to the station six weeks prior to your event or the beginning of your special programming.

Try to develop a relationship with public service directors at your local media. The more they know about you and what you're trying to accomplish, the more helpful they may be in scheduling your PSA out of "the dead zone," i.e., midnight to 5 a.m. TV and radio stations get hundreds of PSAs a week, so you want to find a way to stand out in their minds.

PRODUCING A PSA FOR TV

PSAs should be written for the ear. Try not to use words that are difficult to say on their own or difficult in combination with other words. Practice reading your PSA copy aloud, or have someone else read it aloud so you can hear how it sounds.

From a budgetary standpoint, the cheapest way to make a PSA for television is to do a voice over with a slide. The slide remains on the screen while your PSA copy is read aloud. Your copy should contain all the pertinent information. Talk to each TV station to find out what length your PSA should be. Time it exactly. Read the copy a few times in different rhythms and cadences to be sure. A TV station may or may not edit your copy for you. If they do, they may change your meaning or emphasis to fit their time frame. If they don't, which is more likely, they won't call and ask you to shorten it. It simply won't ever get on the air.

Submit a double-spaced typed sheet (preferably on library stationery) with the PSA copy written out. On the same sheet, you must also include the start and ending dates of broadcast for your PSA, its length, and a contact person's name and telephone number.

PRODUCING A PSA FOR RADIO

Radio is a lot easier and cheaper to produce and PSAs are free. You can either supply the copy, which a station announcer will read on air, or you can supply the station with a prerecorded tape of your message. As with television, you must call and find out what format they prefer, cassette or reel-to-reel tape.

Once again, regardless of which road you elect, you must provide the same written information to the radio station regarding length, start date and end date, contact person's name and telephone number, preferably on library stationery.

HOW TO GET YOUR PSA AIRED

There are no guarantees your PSA will be aired, even in the "dead zone." However, the more interesting your PSA, the better the cause, the greater your chances are for multiple broadcasts and for broadcasts out of the "dead zone."

Talk to each public service director at the radio and TV stations in your market area. Be enthusiastic and comply with all format rules. Don't be shy about calling the station periodically to find out if your PSA is airing and to encourage its broadcast. And when you hear or see it broadcast, send a note to the public service directors, tell them you saw or heard it, and thank them for getting it on the air.

MONITORING YOUR AIR TIME

Since it is virtually impossible to get any kind of scheduling information out of a TV station's public service department, monitoring TV PSAs usually involves luck, persistence, watching lots of TV and persuading your staff, coalition, friends, relatives, library Friends group, and others to watch and let you know if they see the PSA, on what station and when.

DEVELOPING A LIBRARY SERVICES BROCHURE

There are many brochures about different services and programming within a library. The primary goal of your library services brochure is to be picked up and used. To do this, the cover must attract prospects (your target group) and its size (or length) must not be so cumbersome as to inhibit reading. Your library services brochure should be a ready reference tool. And since your brochure is an invitation to make fuller use of your library's resources, its overall tone should be welcoming.

YOUR LIBRARY SERVICES BROCHURE SHOULD BE A READY REFERENCE TOOL.

PURPOSES OF A LIBRARY SERVICES BROCHURE

Although the content of a general library services brochure varies with each library, the function of the brochure doesn't. A library services brochure is an overview of the whole library. It is an introduction to the library, its layout and resources, policies and procedures. It is a starting point for the new patron who is accessing the library's services and resources.

Your brochure should be small enough to hold in your hand. It also should treat broad subjects in a brief fashion. Your brochure should answer such questions as "What do you have?" and "How can I find it?" Finally, your brochure should set out the conditions for library use–hours, borrowing privileges, etc. Your brochure should do more than just impart basic information. It should also welcome the patron and encourage library usage.

You might want to collect library services brochures from other sources and examine them for style and content. By collecting sample brochures, you'll identify what you and your library coalition like. These samples will provide guidance as you determine cover, content, organization, type, graphics, photographs, paper, and ink.

DESIGN AND FORMAT: THE ART OF COMMUNICATION

Your brochure layout and design should reveal rather than obscure messages about library services. It also serves as a nonverbal indication of the importance of the information you're transmitting. Because brochures are often responsible for the first impression a new patron forms of the library, it is important that they represent your library and your program in a way that values the target group.

The cover is probably the most important element because it carries the burden of attracting attention, and because it is the most expensive element of the brochure to print. Covers should not be the work of amateurs. Whoever designs the cover should have some design experience. Covers can act as a lure or a deterrent. Once you've developed a good brochure cover design, you can probably use it again and again through the years, and with different target audiences.

The brochure's inside layout involves choosing typefaces, type size and spacing, text arrangement, illustrations and text subheads that help communicate at a glance the information contained on a page. Related passages of text should be grouped together. White space should be used to indicate a change of subject and to make the copy appear easier to read and more friendly. Margins should be ample and layout should take into consideration the look of facing pages.

ORGANIZING YOUR BROCHURE CONTENT

Subject headings (or text subheads) can act as a guide to help the reader find the information he/she needs at the moment. Subheads should be set in bold type so they stand out from the body of the text. It's also important to select subheads that are important to the reader. Avoid using technical jargon or vague headings.

What should your general brochure cover? Consider including: library hours, a description of your library's holdings and the audience you serve, how to access to the collection, borrowing privileges and other policies and procedures, services, your library floor plan, a map showing the library's location, and information about your program.

BROCHURE DISTRIBUTION

One of the major considerations in planning your library services brochure is how you will distribute it once it is written, designed and printed. It should probably be available on a general basis at an information kiosk or in clear plastic brochure boxes on information, reference and checkout counters.

You could also distribute your brochure during classroom visits and library tours. Brainstorm with your staff, team and coalition on the distribution possibilities. You'll want to consider all your alternatives before you make a commitment about how many you will print.

PRODUCING NEWSLETTERS

Preparing newsletters for your library program takes time and money. Newsletters can be monthly, quarterly, annually or irregularly published. Make sure you select a frequency that you can live with. Whether or not you've already launched a newsletter, there are several elements that can help you evaluate your current newsletter or prepare to publish one.

If you understand what you want your newsletter audience to do as a result of reading your newsletter–what impressions, beliefs, values, information, and image you want to share–you will be better prepared to plan the content. To help define your newsletter's purpose, finish this statement: As a result of people reading this newsletter, I hope they …

DEVELOP IDEAS FOR NEWSLETTER CONTENT

Not everyone who reads your newsletter is looking for the same information and insights. Therefore, you must gather a variety of information that will appeal to the wide range of readers in your newsletter audience.

- Use a mix of articles that will give all segments of your audience something of interest to read. For example, your newsletter audience might include: Friends of the library, coalition members, the media, library staff, key communicators, organizations that serve the program's target audience, and city/county government (elected officials and employees). Each group has different interests and information needs. Don't weight your content too heavily toward one or two segments.
- Work with your coalition and staff to brainstorm article ideas. Key informants and

coalition members can be your next best source of article ideas right now. Your best source is often the reader. That doesn't mean every reader's suggestion is viable but many are. Keep the lines open for ideas, and let reader surveys help you go searching for new ones.

- Publish data and information that might be useful to others targeting the same community your library program does. Ask yourself, if you were a member of that audience, would you read it?
- Divide your content into different styles: short newsy pieces; longer articles that explain and analyze the situation; columns that offer advice; people news; and success stories.
- People like to read about people. Include names of new coalition members or staff; recognize people who have made significant contributions to the program; acknowledge individual achievements as they relate to the library program; and list the names of people who wrote articles or helped with research. Using the newsletter to recognize individuals for their support and contributions adds a positive element. Use your newsletter to thank people, recognize their contributions and achievements, welcome and recognize new staff and coalition members.

WRITING YOUR NEWSLETTER

To enhance readership, your newsletter writing should be clear and concise.

Here's how:

- Use short sentences, short paragraphs and short words.
- Use active verbs, concrete nouns, and lots of quotes.
- Avoid jargon or buzz words that could confuse readers.
- Explain why things happened in your stories.
- Get right to the point at the beginning of each story.
- Have someone else involved in the program review the copy and make suggestions.
- Edit, edit, edit.
- When handling translations, have one translator translate from English to the second language, and another translate the "translation" back into English. You'll discover problems in your translations more quickly this way. Oftentimes it's best to write copy in another language, rather than translate copy from English.

Be aware that producing a newsletter is a team effort. Brainstorm with your team, library staff and your coalition. Delegate writing assignments. Give people a format (what, when, where, how and why works in most cases) for their writing, and they will accept their assignments more readily. Ask them to interview a few people for quotes. Or have staff research data that would be of interest to your audience and write a summary.

THE LEAD ROLE OF EDITOR

Newsletter editor is not an easy role because it has many responsibilities–assigning stories, seeing that deadlines are met, finding appropriate photos or making sure they are taken, editing and writing headlines and captions. Other people–volunteers, library staff, coalition members–can help with writing. Remember, it is unrealistic to expect one person to put out an informative, enlightening and entertaining newsletter alone on a regular basis. A good newsletter may be a team effort, but it requires a responsible leader.

"PFC has been one of the most rewarding experiences both professionally and personally in my library career."

USING HEADLINES

Headlines can help you do many things to engage the reader. Do yours attract reader attention? Do they present the gist of the story? Do they satisfy the reader who is just scanning the newsletter? Do your headlines sell the story?

Headline writing is not second nature. It is a skill that you have to practice to improve. If your readers can scan your newsletter and get the gist of each story from the headlines alone, you've communicated something. We read the things that interest us and headlines are your chance to get readers interested. Writing headlines takes practice.

DEVELOPING AN EASY-TO-READ LAYOUT

Selecting a consistent format for both the layout and typography of your newsletter lays the groundwork for success. The first issue of any newsletter is the hardest because you're experimenting with formats, type styles, and the arrangement of stories.

Once you've developed a format that works, stay with it for future issues to streamline

newsletter production. Changing your newsletter format gives the appearance of a multiple personality. The more consistent your format, the easier it is for readers to find their way around the publication.

The layout should reflect which articles are the most important while letting each story or column stand on its own. Usually, a modular format works best because it allows flexibility and consistency.

DEVELOPING EFFECTIVE SIGNAGE

Sometimes changing your library floor plan can provide easier access to collections of interest to your target group. When materials aren't easily visible from the entry, more signage may be required to guide new users to that area. When developing new signage systems, you also need to look at the library's overall floor plan. Be sure to have a floor plan layout to work with while you're developing your signage system.

YOUR STAFF IS A VITAL RESOURCE IN DEVELOPING NEW SIGNAGE.

Remember, too, that a signage system cannot overcome the negative effects of poor visual access, a confusing floor plan, and little differentiation between areas. Sometimes collection materials have to be relocated to achieve direct access.

KINDS OF SIGNAGE FOR LIBRARIES

There are several kinds of signage for libraries. They include:

- Welcoming signage (near the entry or lobby);
- Language appropriate signage (on the front door, staff name tags, collection materials, directional);
- Directional signage (helps a person find his or her way to an area that is out of view from the entryway);
- Informational signage (labels materials, resources, reference, and announces programs); and
- Instructional signage (explains how to use computers, the Dewey Decimal system, or library services).

Signage needs are based on patron behavior. Many patrons, especially new patrons, will not inquire when they cannot find something in the library. The patrons who do ask questions are a good resource for identifying what new signage might be needed. Start tracking patron inquiries with logs at each staff person's desk. Keep logs for a few months and determine what frequently asked questions can be addressed through signage. Maybe signage could help guide patrons to the materials they seek.

Your staff is a vital resource in developing new signage. After all, they observe patron behavior and respond to their questions daily. Your patrons, however, bring an outsider's viewpoint–not a librarian's–and may provide a different perspective. Work with your team, coalition and new target-group patrons in developing new signage.

TIP SHEET: DEVELOPING EFFECTIVE SIGNAGE

1. Locate signs with consistency throughout the library. Consistent placement allows the visitor to predict signage locations.
2. Signs should be capable of being absorbed in passing. Few people have the time, or are willing to take the time, to read more than a few words. Signs that require study are ineffective.
3. Keep sign terminology simple and uniform. Consistency is the dominant characteristic of any strong signage system. Don't use words interchangeably (will you call them periodicals or magazines, serials or journals?). Decide and stick with the terminology. Where signs are concerned, short is better than long–the fewer words you use to convey the message, the more likely it is to be read.
4. Sign typography and layout should be consistent and enhance readability. Choose one lettering style and use it throughout the signage system. Use a combination of upper and lowercase letters for easiest comprehension. Type size should be based on the distance from which the reader must stand to comprehend the sign. Legibility is the test of a good sign.
5. Signs must be noticeable. In many libraries, the signage system in use today is the one installed when the building was constructed. In addition, many library signage systems were designed by architects so they may be tasteful, but they are hardly attention getting. You can capture attention through layout of the message, or with color, lettering, sign shapes, symbolism and lighting conditions.

6. Experiment with temporary signs. Once you've outlined your signage needs (locations, what signs should say, what languages are appropriate), develop temporary signs and install them. Staff should observe and systematically record patron behavior, inquiries and objections. Members of the target group should be invited in to comment on signage and offer suggestions. Temporary signage gives you further opportunities to make changes, if necessary, before permanent signage is manufactured and installed.
7. Build in flexibility to your signage system. Whatever signage you develop, keep the long term in mind. Libraries are constantly shifting organisms. You can count on change, so plan for it.
8. Good signage provides a guide, not just a label. The tendency sometimes is to label library collections rather than guide patrons and visitors to areas of interest. Grocery stores have made great strides in developing signage systems in recent years. Look to them, do-it-yourself hardware stores and other retail outlets for ideas on how you can make your library's signage more effective.
9. Black on yellow is the most legible and best remembered color combination for signage. Black on blue and red/green combinations are the least legible and least liked. Red takes the eye longer to process than any other color.
10. Make your patrons feel comfortable even before they enter your library. Place welcoming signs in the parking lot, or outside your library entrance. Place signs at the library exit in the appropriate languages saying "Thanks for your visit. Please come again."
11. Evaluate your library signage annually. What has changed in your library that might require additional signage or changes to current signage? What new materials or services might require additional signage? Is a rearrangement of your library floor plan needed? Observe patron behavior and be willing to make changes that will help patrons access materials more easily.
12. Check out what other libraries and service institutions are doing with their signage. Hospitals, clinics, museums–each takes a somewhat different approach to signage. Visit these institutions in your area and see what approaches or techniques they use that you might be able to adapt to the library setting.

TIP SHEET:
HIRING CONSULTANTS AND DESIGNERS

1. I heard it through the grapevine: Word-of-mouth referrals are usually the best. Ask around. Another library or service agency may have had great success with a consultant and will recommend that person or firm to you. However, even if your colleague praises his or her consultant to the skies, you should interview at least three consultants before hiring one.
2. What to consider: When comparing marketing or public relations consultants, consider the following: relevant experience, marketing savvy, grasp of the assignment, listening skills, access to creative people (graphic designers and writers), and their own creativity. Ask for work samples or a chance to look at their portfolios, and check references.
3. Measuring success: Make sure the consultant you choose can help you identify ways to measure success. In other words, when designing marketing programs and activities for your library, the consultant should identify measurables that will help you determine which programs work best for you.
4. Know what you're spending: Costs for marketing and PR consulting vary widely. When you find the right consultant, make sure you understand their fees, how you will be billed and what you can expect for your money.
5. Look at the portfolio: Are the marketing materials they developed appropriate for each client? Is there a variety of work–advertising, brochures, logos, signage, direct mail, etc? Did the work solve the client's marketing problems? Do you like the designer's or consultant's work? Do you like the designer or consultant?

"PFC strengthened our library's standing in the community."

6. Check references: Don't judge by the portfolio alone. Is the designer easy to work with? Does he or she meet deadlines? Did the jobs go smoothly? Did the jobs come in on budget? Would the client hire the designer again?
7. Don't go by price alone: The cheapest designer isn't always the best value. Hire the designer you feel can do the best job for you, even if he or she is twice the price. You'll have to live with the work they produce for a long time, so get the best you can afford.
8. Get an estimate in writing: Never embark on a project without first discussing fees. Competent graphic designers can give you reasonably accurate estimates when the parameters of the project are spelled out. Don't be afraid to ask them to itemize the bid according to writing, artwork, photography, coordination, and printing.
9. Show them samples: Start collecting brochures, direct mail pieces, and advertisements you like. These will give your design and marketing people a good idea of the styles, colors, and copy approaches you prefer.
10. Brief consultants and designers fully: Be specific. Tell them the results you expect, the deadlines you want them to meet, protocol, policy, cultural sensitivity and language issues–everything they need to do the job.
11. Don't haggle over fees: If you can't afford the price, figure out what you can afford. The consultant or designer can probably scale down the project to fit your budget.
12. Let your designer shop for print estimates: This is his/her area of expertise, not yours. Your designer will know which printers are best for your project and how to get an accurate bid.
13. Let your designer supervise the printing: 1,001 things can go wrong with a print job especially if you don't know much about printing. Letting your designer supervise the printing will greatly reduce the chances of costly errors.
14. Read proofs of layouts carefully before printing: Nothing is more irritating than spotting a typographical error after the brochure has been printed. YOU are responsible for catching typos and other errors, not the copywriter, not the typesetter, and not the designer. Have several people in your library proofread the art before it goes to the printer.
15. Small jobs first: Try consultants and designers out on small projects before hiring them for large ones.
16. It's a team effort: Make your consultant and designer part of your library's team. Invite them to staff meetings and coalition meetings and introduce them to all of your library staff. The more consultants know about your library and program, the better the job they can do for you.

USING REQUESTS FOR PROPOSALS

On the following page is a real-life example of a Request for Proposal or RFP. RFPs are commonly used to solicit proposals from ad agencies, public relations firms, consultants, writers, editors or graphic designers. RFPs can be issued on library stationery and then sent to all qualified firms or consultants you've identified in your community, or to just a few. The more firms you invite, the more proposals you might receive, and having a choice is to always a good thing.

SAMPLE REQUEST FOR PROPOSAL

August 18, 2000

ABC Graphics
1234 Design Street
Stockton, CA

The Stockton-San Joaquin County Public Library is seeking a qualified graphic design firm to develop a logo for the Southeast Branch's outreach program. Entitled "Construyendo Puentes–Building Bridges," the program targets the Hispanic community in the southeast Stockton area. The logo developed for the program will be used on library signage, billboards, fliers, brochures, publicity and a library book van. The funding for this RFP is set at $1,500.

Please submit an original proposal plus four copies, and at least five samples of your work. Deadline for proposals is Tuesday, September 1, 2000, at 5:00 p.m.
Proposals should be delivered to:

Library Division Manager for Branch Services
Stockton-San Joaquin County Public Library
605 North El Dorado Street
Stockton, CA 95202

Proposals need not be lengthy, but your proposal should include:

1. A brief description of your firm's experience and qualifications;
2. A list of staff who will work on the project, and a brief bio for each;
3. A list of at least three client references with contact names, phone numbers, addresses and name of the project you worked on;
4. How you approach a logo design project;
5. A budget detailing costs for services and expenses; and
6. At least five samples of your work.

No proposals will be accepted after the deadline. A selection committee will review proposals, select qualified firms by September 9 and interview representatives on September 13. A final decision will be made on September 16 and will be posted at the Central Library Administrative office at 4:00 p.m. The finished logo must be delivered to the library by November 1, 2000.

Questions regarding this proposal should be directed to the Library Division Manager for Branch Services, Stockton-San Joaquin County Public Library, (000) 000-0000.

RECOMMENDATIONS

1. **Become familiar with local media: newspapers, radio and television.** By doing so, you will be able to direct your publicity to the informational sources which reach your target community most effectively.
2. **Prepare promotional materials and information for the media.** The media will print or broadcast information which they think is of value to their audiences.
3. **Encourage library participation in community events to maintain direct contact with people in the community.** Face-to-face contact is often the most effective public relations effort.
4. **Use programming for children to reach other family members.** Children's programming brings other family members to the library–often for the first time.
5. **Work with local businesses to promote the library and find common ground to work together to serve the community.** Many businesses are just as interested as the library in improving the community's quality of life. The library will be viewed as useful and inviting if it is allied with businesses and organizations which are trusted by community members.
6. **Engage in PR activities that take the library outside of its walls to maximize opportunities to reach the community, rather than wait for the community to come to the library.**
7. **When targeting non-English-speaking people, develop brochures, fliers and other promotional materials in the language(s) of the target community.** Be sure those translations are accurate.
8. **Review library signage (both inside and outside the library), exhibits and displays to be sure they are welcoming and inviting. Translate signage where needed.** Multilingual signage sends a message to the entire community that all are welcome.

MANAGING CHANGE

Managing change is perhaps the most critical and challenging aspect of transforming an organization. Once library leadership makes a formal commitment to implementing change, a reflective and significant planning period should follow. Such planning focuses on developing strategies and techniques to manage and sustain the Partnerships for Change (PFC) philosophy in a true partnership with staff, administration, and the community.

The key concepts in this chapter include:

- resistance to change is an inherent characteristic of people and organizations;
- organizational change may threaten individuals' self-concepts and their sense of wholeness and integrity; and
- change may be managed with planning and sensitivity to human, as well as program, issues.

This chapter discusses practical methods for effective change management through policy revision and implementation. The chapter includes: strategies and tactics to facilitate acceptance and implement change; six stages of change that enable the library to anticipate change as a process; teamwork as key to the success of any organization; and how organizational change speaks to the design, implementation, approval and consequences of the change.

MANAGED WELL, CHANGE CAN TRANSFORM YOUR LIBRARY INTO A RESPONSIVE AND RECOGNIZED COMMUNITY LEADER.

As change management is an evolutionary process requiring careful planning and preparation, it is essential for you to review all sections of this chapter before proceeding. Change can be difficult, frustrating, and may seem almost impossible to implement. Managed well, change can transform your library into a responsive and recognized community leader. Libraries have the potential to become key organizational players in their communities, and this change is essential for the health and development of your library. Change takes place regardless of your program–how libraries respond to change makes the difference. This chapter can help you rise to the challenge.

STRATEGIES AND TACTICS

Effective management of change requires strategic thinking about how those who are affected perceive change.

CHECKLIST FOR SELECTING STRATEGIES AND TACTICS

Change management requires considerable input from a variety of key personnel and individuals from departments and organizations that interact with the library. Consider the following questions when selecting the best strategies for optimum results:

COOPERATIVE STRATEGIES

1. Who in your organization is most likely to cooperate? Who are your "change makers," those who will facilitate change?
2. What are the benefits of cooperating?
3. What resources can be shared?
4. What resources must be rearranged?
5. What activities will facilitate cooperation/ collaboration?
6. What role might a coalition of community members play? Individual community leaders?

CAMPAIGN STRATEGIES

1. Who needs to be convinced that change is beneficial?
2. What are the benefits of the change to the unconvinced?
3. What will the unconvinced have to give up?

4. What resources or benefits do you have to bargain with?
5. What will you have to give up in the process?
6. What is the role of the library or administrative team?
7. What is the role of the community?
8. Who will lose power or authority? What will be gained or lost?
9. What opposition might you expect from those losing power?
10. What can you do to decrease the negative impact of their opposition?

CONFLICT STRATEGIES

1. Will there be major changes in the allocation of resources?
2. Who will gain resources? What resources will be gained?
3. Who will lose resources? What resources will they lose?
4. What opposition might you expect from those losing resources?
5. What can you do to decrease the negative impact of their opposition?
6. Will there be major changes in authority or power?
7. Who will gain power or authority? What power or authority will be gained?

LIBRARIES MAY ENCOUNTER RESISTANCE FROM STAFF WHO ARE COMMITTED TO THE STATUS QUO.

STAGES OF CHANGE

Change is a process that occurs in several stages. Perceptions in each stage may be conscious or unconscious, planned or unplanned.

Stage 1: Identify Problem

Problems can be identified by surveying unsatisfied demands on the system. The needs assessment process is a conscious process to identify problem situations. The process identifies gaps between what exists and what communities and libraries feel ought to exist.

Stage 2: Examine Possible Solutions

Possible solutions are consciously or unconsciously identified. Unconscious considerations may include unstated values and participant preferences and fears. Alternatives can include: pre-existing programs; readily available programs; programs that can be implemented with difficulty; or programs that must be invented.

The needs assessment process should include activities designed to generate solutions from both community members and library staff. The needs and perspectives of both groups should be considered.

Stage 3: Evaluate Alternatives

Make a comparison between desired outcomes, probable outcomes and cost/benefits. Various alternatives are examined to determine their potential effectiveness and probable consequences. Consider cost/benefit ratios and implementation feasibility. You may evaluate alternatives as part of the needs assessment process.

Stage 4: Choose a Course of Action

Choose an alternative for implementation. The chosen alternative should reflect the needs and preferences of both library staff and the targeted community. While the course of action chosen may not be the most ideal, it should be "the realization of what ought to be, all things considered." Decisions built on "what ought to be" are based on inquiry and evidence.

Stage 5: Initiate Action

Begin change-related activities. These might include:

- policy formulation;
- selection of tactics based on the previously selected strategy;
- dissemination of information about the change(s); information should explain the new policies/programs; demands (problem) that made change necessary; connection between desired outcomes or goals and means prescribed; the general rationale behind the strategies and tactics chosen to implement the change; and
- resources allocated toward implementation efforts.

Libraries may encounter resistance from staff who are committed to the status quo. Changes in the allocation of resources may become a major source of disagreement and stress. Libraries should anticipate some resistance and develop proactive strategies for addressing that resistance.

Stage 6: Institutionalize Change

The change becomes part of the system. Organizational and participant values are

modified to accept the new goals, strategies, policies and programs. New goals are internalized by participants.

This phase may take some time, depending on how entrenched the organization is in the status quo. Behavior can be modified faster than attitudes. Advocates of organizational change should include in their implementation plan tactics that are directed towards helping other members of the system accept and internalize changes.

TEAMWORK

Teamwork is an essential ingredient in effective time- and team-management. In many cases, the inability to divide duties masks either a sense that nobody else can do the job, or the fear that someone else can do it better. Do not give in to temptation to do it all yourself. Learn to delegate. This allows you to extend the limits of your personal time. By letting go of tasks which can be done efficiently by others, everyone's talents are used and morale improves.

The positive feeling that comes from the team's effort is often motivation and reward itself. Team members accept and internalize changes when they have been an integral part of creating them.

Listed below are five steps that will help you feel secure about sharing responsibilities and tasks:

PREPARATION

- Be properly prepared.
- Select the right person for the job. Be certain of your goals and expectations.
- Invest time in reviewing materials with staff and presenting them clearly.

ACTION

Take time to seek a clear, mutual understanding on:

- the facts
- the goals
- possible problems and solutions
- performance expectations
- time line and checkpoints
- level of authority
- staff support

MONITOR THE PROCESS

- Maintain checkpoints to provide feedback and support.
- Play the critical coach at this point.

EVALUATION

How did each team member perform during the process? What were the results of the assignment?

RECOGNITION

Thank team members for participating and remember to give feedback on results of achieving goals of the plan.

ORGANIZATIONAL CHANGE: RESTRUCTURING POLICIES AND PROCEDURES

Even as organizational changes are proposed, you can expect to experience philosophical differences with some staff, administrators, and supporters. Many of these individuals may intellectually support the changes; however, they may lack the necessary perspective or skills to embrace or implement new directions. This will cause stress and their anxiety may undermine attempts to implement organizational changes.

This section is designed to assist you in the process of restructuring policies and procedures.

TEAMWORK IS AN ESSENTIAL INGREDIENT IN EFFECTIVE TIME- AND TEAM-MANAGEMENT.

LAYING THE GROUNDWORK FOR CHANGE

Before diving headlong into any restructuring process, large or small, ask yourself the following:

- **What is going to be changed?**

Do you have a clear picture of what needs to be changed? Are you proposing a change to an existing policy/procedure or creating new policies/procedures?

- **Why are things the way they are?**

What is the history behind what you are trying to change? How was the current policy/procedure established? Who established the current policy/procedure? If you are adding a policy/procedure where none previously existed, why didn't one exist previously?

- **Why is the change justified?**

What, specifically, are the reasons for making a change now? Could you explain the reasons for the change to someone who does not hold your point of view?

- **Who must approve the changes you are proposing?**

Depending on the change you are proposing, different individuals may be required to formally approve the change. Will you require approval of: the library administrator, city manager, assistant city manager, city council, city attorney, county administrators, people you supervise?

- **Who should be consulted about the changes you are proposing?**

Beyond receiving formal approval, there may be individuals or groups with whom you should discuss changes before they are proposed or implemented. Should you consult with: the library administrator, city manager, assistant city manager, city council, city attorney, Friends group, coalition, staff, end-users, non-users, county administrators, people you supervise?

IN DESIGNING YOUR CHANGE, REMEMBER TO DESIGN AN EVALUATION PLAN.

- **What resources will the change require?**

Will the change you are proposing require funding? Remember that the change may not require direct funding, but implementation of the change may require additional resources. For example, the decision to provide multilingual library forms has the attached cost of translation and printing.

Will the change require a reallocation of staff time? Even small reallocations in staff time may have large implications for the staff.

- **Who will the change affect?**

Additions or adjustments in service or procedures will affect your target population, but who else will be affected? Current patrons? Prospective patrons?

It is important to think through how the changes you are proposing will affect your staff. How will their responsibilities change? Will the proposed changes add to their workload? How will these additions to their workload be absorbed? Who will support or oppose policy changes?

- **Making the change**

By examining the above questions, you have laid the groundwork for change. You are now ready to design and implement the change.

- **Designing the change**

Make certain to discuss the proposed change with those individuals/groups involved in the formal or informal approval process. Share with them your thinking, and solicit from them their feelings and thinking about the changes you propose to make. The critical concept is the *exchange* of information. Who will oppose policy change implementation?

In discussing potential changes, be careful about prematurely commiting to specific changes or time lines. Unfulfilled expectations can quickly and severely undermine support and damage credibility.

In establishing your time line, make certain to leave sufficient time for things to go wrong. Remember that it is easier to explain the early completion of a project than to justify continued delays and missed deadlines.

In designing your change, remember to design an evaluation plan. You may wish to ask the following questions: How will you know that change has been implemented? What will indicate that the change has been correctly implemented? What measure will you use to show that the change is having the desired effect?

CREATING THE CHANGE VEHICLE
(Memo, Letter, Policy Revision, etc.)

Take the time to create several drafts of the document describing the change. If it is to be a part of a larger document, such as a page or a section of a policy and procedures manual, be certain that it conforms to the format established by the larger document.

If the official format is confusing or visually unappealing, you may wish to make a second version with more white space, explanatory notes, etc. If you choose to do this, however, make certain that you clearly identify what is to be part of the official version, and what is only explanatory. Also make certain that any text, which you identify as official in a non-official version, is, in fact, identical to the text of the official document.

Although you may not want or be able to distribute the draft document widely, you should seek comment on your draft proposal from the individuals who will approve it, or who have a stake in the change.

CONSEQUENCES OF CHANGE

Once the change has been implemented, your work is not done. Don't forget the evaluation process. Beyond using the evaluation criteria established when you were designing the change, look at other things that the change might have impacted. Have unanticipated costs arisen? Is the staff accepting the change? Has their workload increased? Are they feeling additional stress because of the change? Is the change being readily accepted by the target community? Is the change being readily accepted by the non-target community?

RECOMMENDATIONS

1. **If outreach is not a tradition in your library, you may need to manage that change by communicating with staff how important it is for the library and library staff to be visible in the community.** If outreach isn't institutionalized in your library, winning over the community is going to be that much more difficult.
2. **Innovative recruitment, interviewing and testing for bilingual, bicultural staff from the local community is important for program success, particularly in making members of the target population feel welcome in the library environment, especially if they are unfamiliar with it.**
3. **Internal communication is important with respect to the branch and jurisdiction as a whole.** This "internal marketing" helps establish the basis for incorporation. Good communication with staff and patrons reduces potential concerns about changes. A series of open dialogues with staff can alleviate concerns about changes to specific library policies.
4. **Be prepared to address bureaucratic issues.** The majority of program participants indicated that local bureaucratic issues obstructed program activities. The accounting and hiring practices of city/county governments were major stumbling blocks in some programs, causing greater effort on resolving purchasing and accounting issues than on providing program services.
5. **Serving two populations at the same time adequately, and with the same level of service, was difficult and tended to result in a lower level of service to one or the other of the targeted groups.** Even when targeting only one group, a shift in focus may require you to provide new materials and programs for the non-targeted community to prevent hostile feelings.
6. **Utilize your power base of coalition/Friends to support program efforts.**
7. **Establish ongoing relationships with key decision-makers.** Form subgroups within city/county government to study and respond to change.
8. **Change takes time.** Be realistic: compromise, reciprocate favors, allow time to solve problems.
9. **Obtain library administration support for the change process.** A key factor in the success of PFC was the ongoing support and buy-in of library administration, especially the library director. The strong commitment and moral support of the library director played an important role in allowing local branches to take the risks demanded in changing library service to respond to community needs in non-traditional ways.
10. **Change takes place regardless of program efforts. How libraries respond makes the difference.** Praise good work. Remind everyone that change is stressful and they can learn from mistakes. Provide information to staff on "who/what/where/when/why/how" of change and the importance of their roles. Meet often, communicate often.
11. **Cross-train within jurisdictions and within library systems for enhanced effectiveness, networking, and collaborations.** Cross-training is effective and leads to staff buy-in and commitment.
12. **Revitalize coalition commitment.** Recruit new members, and implement a policy limiting the amount of time any one individual can serve. Stagger terms of coalition membership. Regularly sponsor coalition appreciation events so that the program does not become just another volunteer activity for coalition members.

13. **Support change management in spite of fiscal reduction.** Managing change during times of fiscal restraint is not easy. Set manageable goals based on local needs. A solid foundation for future growth is based on reinforcing PFC concepts and setting attainable, realistic objectives for the library in light of budget reductions. Set reasonable priorities to embrace change.
14. **While these changes seem simple, the library needs to communicate the benefits of the changes to staff and patrons.** As a result of the PFC Program, non-English materials were given greater visibility, often with new furniture, shelving, signage, and permanent displays related to the targeted community. Bilingual signage, ethnically-oriented decorations, rearrangement of furniture, and other changes to the library contributed to a welcoming environment and sense of comfort for patrons.

"PFC helped our library become a community center and gain the support of political leaders."

EVALUATION

Evaluation is a process by which libraries can quantify the work they do, and it has been especially useful in the Partnerships for Change (PFC) Program. The Evaluation and Training Institute conducted the formal evaluations of the PFC Program from 1990 to 1995. The ongoing evaluation of the program, both locally and statewide, was critical to understanding its effectiveness and instrumental in making these PFC guidelines and their recommendations a reality. Without knowing what worked and why, it would be difficult, if not impossible, to share the PFC training and experience.

The real measure of success in any new library program is effectiveness of service. Without knowing what is effective, libraries can't adjust their planning, programs and budgets to continue doing the things that work, while discontinuing the things that do not. Many libraries lack the evaluation opportunities, processes and tools they need to determine how the community sees the library, and how well the library serves the entire community. While many libraries devote considerable resources to serving new populations, they never know whether the impact the library intended is the impact achieved. Evaluation helps the library understand what is effective and what is not, what the library needs more of and what it needs less of to make service to the whole community effective.

EVALUATION IS THE ULTIMATE TOOL FOR MEASURING THE EFFECTIVENESS OF LIBRARY SERVICES AND PROGRAMS.

Evaluation is also critical in gaining financial and political support for libraries. In the world of foundation and federal grants, evaluation is playing a larger role than ever before. No one is interested in funding a program that is unclear on how it will measure results, or how it will define success. Evaluation can be time-consuming work, but the value it adds to a program's potential is enormous.

Evaluation provides libraries with management information that is useful in many ways. Libraries can use evaluation to: compare past and future levels of performance; develop or refine goals and objectives; monitor progress toward achieving goals and objectives; provide data for making decisions, choices and tradeoffs; and to justify budget requests and resource allocations.

Given fiscal constraints, libraries need innovative ways of measuring effectiveness of service. These can include testimonials from patrons, customer satisfaction surveys, or exit interviews after library events or programs. You can quantify your new program success using criteria such as circulation rates, program attendance, questions answered, and equipment use. When targeting new populations who do not speak or read English, your library will need to conduct its evaluation in a non-English language. If your library has developed strong connections to the community, those connections can often provide assistance with translations and with interviewing non-English speakers. Formal and informal community input, using focus groups of target-group patrons, or systematic observation to gather information also help measure effectiveness of library programs and services.

In this chapter, you'll learn: key evaluation terms and concepts; reasons for doing evaluation; benefits of evaluations; the role of goals; identifying resources for evaluation; using self-evaluation vs. independent evaluation; varieties of data collection; questions to ask in planning and evaluation; and recommendations.

Evaluation is the ultimate tool for measuring the effectiveness of library services and programs. Learning about evaluation tools and techniques can help you and your library work to improve library service to everyone in your community.

Evaluation is a comparison of actual program operations and results against a standard. One of

the following two standards are typically used:

1. How well you have met the objectives you set out to reach for the program.
2. How favorably your program compares with data from similar PFC programs.

REASONS FOR DOING EVALUATION

Among the best reasons for evaluating your PFC Program are:

- answering real questions of real interest to important constituents, such as clients (this must be a part of every evaluation);
- attending to a vital part of the planning cycle (good planning depends on good program information); and
- satisfying the powers that be, and other cynical motives (not a happy reason but sometimes real and valid).

BENEFITS OF EVALUATION

The immediate benefits of evaluating library programs include:

- more knowledge about what your program is, and what it is doing;
- better communication about the program among staff and coalition members;
- consensus among involved parties about how to proceed; and
- improved relations with your target community.

Ultimate benefits of evaluation include:

- more efficient program operations;
- program goals achieved; and
- more informed and satisfied community.

Intermediate benefits include:

- better relationships with administrators, staff and constituencies;
- improved funding and other resource development;
- more informed public, more effective image-building; and
- improved user recruitment, community support and involvement.

How evaluation benefits YOU:

- the justification to move forward with confirmed benefits; and
- the authority to find solutions to acknowledged problems.

Key Terms

Evaluation has its own language. Key terms include:

- Benefit: Evaluation can benefit your library program in several ways, including providing information that can improve the program's operations and its effect on target communities.
- Value: Program evaluation requires more expertise–and offers more value–as its focus changes from assessing the process of operations, to immediate outcomes of those operations, to its impact on the community and individuals.
- Type: The type(s) of evaluation engaged in should be driven, first, by the questions to be answered, and, second, by the resources available for conducting the evaluation.
- Measurability: The measurability of a program objective has to do with both its meaning for program goals and the feasibility of gathering information about it.

Key Concepts

- Appropriate data collection occurs within the broader framework of mission, goals, objectives and measures.
- A team problem-solving approach should be used to clarify the purposes and strategies of data collection.
- The choice of data collection approaches and instruments should be decided by the kind of information required and the data collection resources available.
- A work plan for data collection helps ensure quality and timeliness of data.
- Strategies for evaluating many objectives, such as how well change and incorporation are being managed, should draw on multiple data gathering approaches, including quantitative and qualitative varieties.
- The same raw evaluation data, in different forms and formats, can be useful for different audiences or constituents.

- What program findings to present and how to present them are dictated by the audience, and the program goals for that audience.
- Detail, numbers and longer written descriptions are usually more appropriate for internal audiences; summaries, graphics and verbal presentations are more appropriate for external ones.
- The difference between an evaluation report and a publicity piece is not absolute and each has information which can be adapted from the other.

EVALUATION AS PART OF PLANNING

Evaluation is a major event in the planning cycle of any program. It is a critical link between implementing a program and improving it. Its findings and recommendations permit program personnel to make important adjustments to correct deficiencies and to promote program accomplishments to important constituents.

By keeping in mind the need for evaluative information, many opportunities for documenting and measuring program development will be created. Some examples of useful information and documents for evaluation are:

- periodic statistics on library use by target communities;
- comments by community leaders concerning the library's role and image;
- minutes of coalition meetings; and
- memos about in-service training and policy changes.

As basic data for evaluation, this kind of information can enhance program knowledge, improvement and success.

THE ROLE OF GOALS

The most reasonable standards against which the PFC Program can be evaluated are the goals and objectives the program set out to accomplish. An alternative source of standards is data from similar programs–a strategy not readily available for our purposes.

The PFC Program begins with a mission or cause, and proceeds with statements of goals that can accomplish the mission. It is up to each individual library to decide how those goals are to be translated into more specific goals and, ultimately, to quite specific objectives and measures.

Note that even without stating goals and objectives, it is still possible to describe a program's operations and results. The problem is that such descriptions are difficult to assess or evaluate without explicit goals and objective standards. "Thirty-five Asian American teenagers used the library's special Asian collection last month" may or may not be a significant finding unless we know that a reasonable objective was as few as 15 users, or as many as 300. This points out the work involved in setting standards for objectives, even when goals are fairly clear.

THE PLANNING CYCLE

Evaluation is the critical link in the planning cycle between program implementation and rethinking program design. Within the evaluation phase, data gathering is the hands-on work that occurs between the two minds-on activities of deciding what to evaluate and drawing conclusions from the data collected. (Figure 3, next page)

EVALUATION IS A MAJOR EVENT IN THE PLANNING CYCLE OF ANY PROGRAM.

IDENTIFYING RESOURCES

Evaluation can require substantial expertise and be quite demanding of scarce resources. On the other hand, even the novice evaluator with little time or money can accomplish a great deal. The trick is to optimize the use of resources for evaluation. Several items can help an evaluation to be cost-effective:

1. Don't begin to design forms or collect data until you have laid out the goals, objectives and measures for the evaluation. Otherwise, too much time will be spent collecting unanalyzed data. If you ask open-ended questions, be especially sure that the information is needed, because unstructured answers can be difficult to interpret.
2. Have your broader coalition include people with evaluation experience, even if they take a peripheral role in most of the work of the coalition. An evaluator from a local university or government department may be just the person to enlist for ongoing evaluation advice, particularly if he or she is a member or scholar of your target community.
3. Know the audiences for your findings and interpretations–the community, program managers, funders, etc.–before collecting data, much less before writing up your results. Each will require a different set of information and even a different format and style of

Figure 3

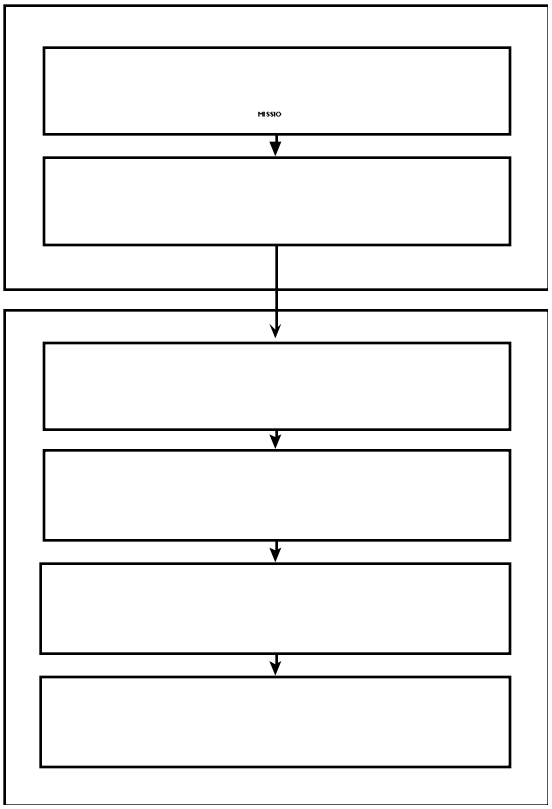

presentation for maximum utility and impact. For example, charts will impress funders, statistical detail is useful to administrators, and a human interest story is best suited for media release.

4. Be cautious in using very expert-intensive and expensive forms such as probability sample surveys or experiments. Be sure you have appropriate assistance and other resources if you plan to do them.

SELF-EVALUATION VS. INDEPENDENT EVALUATION

The choice between doing it yourself and obtaining outside expertise is, of course, not either/or. The "mix" chosen should depend on a careful study of resources available and outside help needed. It is important to note that an independent evaluation–whether requested by you or imposed from the outside–is not, and should not, be independent of your own involvement. That is, external evaluators will require considerable cooperation and effort from your staff in giving and gathering information and, hopefully, interpreting and presenting results. You will also want to exercise close oversight throughout any evaluation.

MISSION, GOALS AND OBJECTIVES

A mission is a philosophy, a general statement of program purpose, that serves as a guide to goal-setting. It has to do with intentions to change or preserve things for the better. Goals derive from the mission and provide programmatic direction. They are more specific than the mission, but still without stating exactly what is to be accomplished. Objectives do state specific outcomes wanted, in ways that lend themselves to verification or measurement.

Each of the three–mission, goal, objective–gives meaning, from broad to narrow, to the others. For example, the components of a mission to improve the life of a community, tied to a goal of increasing library collections, tied to an objective of doubling services to ethnic teens, make the full set of all three statements more understandable.

THE ART OF ASKING QUESTIONS

A proper objective, then, is one that has an obvious tie to a broader goal and an even broader mission. Otherwise, even if you provide a good measure for it, you can't interpret what you've found. For example, an expenditure is just a deficit until you connect it with a goal accomplished.

CLUES FOR "MEASURABILITY"

The flip-side of deriving an objective's meaning from goals is making it explicit through well chosen measures. An objective is measurable if something observable can be specified that has a bearing on whether or not the objective has been accomplished. The "observable" should at least be clear, and quantifiable if possible. We can see that people showed up for an event; we can even count them, in various categories. Often the best we can do is observe evidence indirectly, as when attendance is read as interest in a program.

SPECIAL FOCUS: PROGRAM IMPLEMENTATION

Some service programs fail because they never become firmly established–the machinery of servicing is not in place. Two matters of implementation are of interest for evaluation: Did the program become an integral part of the library in which it is offered (incorporation)? And, was the community actively involved in making the program work (community involvement)?

GATHERING THE EVIDENCE

Collecting evaluation data is collecting evidence: solid evidence that objectives are being met; strong evidence that goals are being accomplished; and arguable evidence that the PFC mission is being fulfilled. The best ways in which to gather such evidence will vary from library to library, but the process of approaching data collection and the array of strategies and tools available should be similar.

Varieties of Data Collection

The processes you use to collect data for evaluation are much the same as those used in the needs assessment (see chapter entitled "Community-based Needs Assessment"). And just like in needs assessment, different strategies and tools tend to answer different questions.

- Community Surveys are best at answering questions about characteristics of whole communities: e.g., "What are age, sex, preference, experience differences among community members?" Findings tend to be relatively shallow, but precise.
- Key Informant Interviews can produce more depth of understanding: e.g., "How, if at all, has the library changed its relationship to the community?" Interview shortcomings are typically poor sources of useful statistical data.
- Observational Techniques are typically even less precise: e.g., "How are people acting toward each other?" However, they can be unbeatable sources of insight.

When formulating appropriate questions/ observations, be sure to:

1. Focus on what you really want to know. If it isn't a PFC objective, don't ask, no matter how interesting the question is.
2. Intrude as little as possible. Do not ask what you can observe; do not observe what you can look up.
3. Verify the information by using more than one measure or respondent. This is the exception to No. 2. If you can, strengthen the evidence; observe and ask, or ask two sources (e.g., do different administrators agree that incorporation is occurring?).
4. Understand what the respondent hears, not simply what you think the item is "obviously" about. Never use a question without pretesting it on an appropriate respondent. Never simply translate; get a back-translation from an appropriate respondent.
5. Make your materials (format and style) and yourself (appearance and manner) presentable. There are a number of ways to shoot yourself in the foot: sloppy questionnaires, offensive dress and more subtle oversights, such as a printed survey with type that is too small to read easily, or an interview that begins with hasty introductions. Achieving acceptability when collecting data may take some empathy and scrutiny.

QUESTIONS TO ASK IN PLANNING FOR EVALUATION

1. Do you really need the information that you are seeking?
   - Remember that data collection occurs within the broader framework of mission, goals, objectives and measures.
   - Do you need the information to monitor or evaluate a stated objective?
   - Do you need the information for reporting purposes?
   - How are you going to collect the information you need?
   - The choice of data collection approaches and instruments must be influenced by the kind of information required, the data collection resources available, and the community about which you need the information.
2. Don't ask what you can observe; don't observe what you can look up. Intrude as little as possible.
   - Are you certain you are collecting the information you think you are collecting?
   - Have you double-checked the questions you are asking?
   - Does your collection method introduce any bias into the data?
   - Is the measure culturally sensitive?
   - Is the data confirmed by another source?
   - Does the data make sense?

"Our PFC library became the most dynamic, exciting branch library in the system."

"Our library's mission statement is very much tuned into the PFC philosophy, encompassing all people and empowering them to succeed in a new life."

3. Are you going to use the data you collect?
   - Are your monitoring/evaluation plans designed to use the data you are collecting in a timely fashion?

RECOMMENDATIONS

1. **Use needs assessment findings and updates to evaluate your progress, and update your service program.**
2. **Develop "user surveys" to evaluate your efforts.** When appropriate, translate surveys into the language of the target population.
3. **Conduct exit interviews outside the library after a library program to provide both quantitative and qualitative information about your programming.** Focus groups and exit surveys provide qualitative information about how your new library program is perceived and used.
4. **Track traditional measures such as library statistics and patron counts to support evaluation.** Use comparisons of those counts from year to year to help analyze the data.
5. **Make formal evaluation a "partnership effort."** Involve your coalition or other community contacts in formal evaluation of your program. Include staff in evaluating the program and in finding out how well the library is linking with the community.
6. **Incorporate studies into your library's routine statistical collection methods.** For example, you could use interns and library school students to assess the program by tracking traditional measures in a one-week or one-month data collection effort.
7. **Make a commitment of time and resources.** If you don't evaluate, you cannot adjust your efforts, doing more of what is working and doing less of what is not. Evaluation is critical to continuing a program. Evaluation doesn't have to continue year-round, but it must be done on a regular basis. When evaluating your program, remember that service program design requires an ongoing effort and that it is developed as a result of change.
8. **Assess the impact of the program.** Evaluate the extent of change in library resource allocation, and how it impacts community service areas.
9. **Conduct site visits which play an important role in evaluation.** Create a checklist of things to "observe" and comment on and have staff from another branch visit the branch where the new program is being implemented. Staff observations can be crucial to ongoing success and implementation of your learnings. Site visits can be even more beneficial when they are conducted by library users, especially community partners, coalition members or patrons from the target community.
10. **Conduct key interviews with all staff involved in the program–from administrators to front line staff.** It is essential to monitoring effectiveness. They also help you identify problems and develop solutions before those problems get out of hand.
11. **Use protocols to help determine effectiveness.** By providing staff with protocols (written methods for handling a patron need, request or complaint), you can be assured that staff is consistent in relating to new patrons.
12. **Measure comparative data rather than just using raw statistics, such as increases in donations and community influence, or simply anecdotal information.** Encouraging staff to keep logs to track and measure activity helps them report changes in service patterns as well as in their own perspectives.
13. **Look for indicators that the PFC philosophy is being incorporated into your library's service program.** Evidence of success includes: greater staff awareness and library visibility in the community; greater in-library use of materials; expanded number of library cardholders from the target population; addition of new materials to the collection; increased circulation of materials specifically for the target population; and an increased number of reference questions.

SUCCESSFUL LOCAL PROGRAM ELEMENTS

The Partnerships for Change (PFC) Program successfully impacted local library program elements in several ways. Formal evaluation of the PFC Program indicated that in general, specific program activities and service design changes were successful when they directly addressed community needs. There were three broad categories of successful activities: improved access to library services; revised collection development and programming; and focused outreach efforts.

IMPROVED ACCESS

PFC Program activities that served to increase library service and access to members of the targeted community were generally successful. This was particularly true for targeted communities which were not familiar with the concept of free library service as practiced in the United States, and with individuals who perceived the library as a threatening, unwelcoming government institution. Specific activities to improve access included:

- translation of library card applications and materials into languages other than English;
- restructuring of branch hours to be open at times most convenient for the targeted population;
- bilingual signage, ethnically oriented decorations, rearrangement of furniture, and other changes to the library that contributed to a welcoming environment and enhanced patrons' sense of comfort with library service;
- book vans, bookmobiles, and other off-site services to reach target community members who were too far away from a library, or in areas lacking adequate public transportation, to enable patrons to reach library buildings; and
- use of bilingual, bicultural staff to further support a welcoming environment for patrons unfamiliar with library service.

REVISED COLLECTION DEVELOPMENT AND PROGRAMMING

The ability of PFC libraries to obtain materials in non-traditional formats played a key role in the success of the programs in meeting community information needs. Library Services and Construction Act funds supported obtaining non-English language materials, fotonovelas, videos, and other materials. Yet more important than the simple purchasing of materials was the restructuring of the collection development philosophy for many library jurisdictions. PFC libraries emphasized the purchasing of materials that addressed community needs, such as English-language training, citizenship, automobile and household repair, etc., rather than focusing on purchasing materials used only by a small segment of the entire community.

Collection development improvements also involved more than the mere acquisition of materials. For example, most of the PFC programs already had some non-English language materials in their collections prior to PFC. But in most cases, these materials were limited in number and scope, and were often housed in the back of the library, with poor signage directing patrons to these sources. As a result of the PFC Program, the non-English language materials were afforded greater visibility, often with new furniture, shelving, signage, and permanent displays related to the targeted community.

Similarly, programming designed to meet the needs of local community members was also a successful element of the PFC Program. Bilingual story times, and Dial-a-Story programs for children were especially well received by the community, including members from the non-targeted community who wished to expose their children to other cultures. After-school tutoring and computer training (especially on using the Internet) were also successful in meeting community needs for the library to serve as an educational resource for children, youth and adults. Additional local PFC programming included workshops on such topics as immigration, employment, health, nutrition and parenting–all in response to community needs as identified through local needs assessment.

AS A RESULT OF THE PFC PROGRAM, THE NON-ENGLISH MATERIALS WERE AFFORDED GREATER VISIBILITY . . .

FOCUSED OUTREACH

Based on the Evaluation and Training Institute's formal assessment, outreach efforts were the most successful program component across all PFC programs. Focused outreach led to increased library awareness by patrons from both the targeted and non-targeted communities. Such outreach efforts included articles in local newspapers, radio and TV spots (especially in media serving the targeted community), bus stop benches and banners highlighting the library's location, on-site visits to local schools, attractive fliers and posters, as well as premiums (giveaways) with the library logo imprinted on them such as bookmarks, newsletters, pens, pencils, key chains, T-shirts, and calendars.

Library staff also participated in community festivals and fairs which provided opportunities for promotion and outreach on an ongoing basis. This experience taught PFC library staff an important concept: it is often easier, and more effective, to plug into a community event that already has an audience, than it is to create an audience for a program inside the library. Participating in community events takes the library beyond its walls.

LIBRARY DIRECTOR SUPPORT ENSURED LOCAL SUCCESS

A key factor in the success of all of these activities was the ongoing support and buy-in of library administration, especially the library director. The director's strong commitment and moral support for PFC played an important role in allowing local branches to take the risks demanded by the PFC program's goals of changing library services to respond to community needs in non-traditional ways. The director's support was also critical in navigating the in-house bureaucracy, which often delayed and/or hindered collection cataloging and processing, hiring of staff with bilingual skills, etc. Library director support also provided in-kind and other resources for PFC Program implementation. The commitment of library administration became even more important at the conclusion of Library Services and Contruction Act funding to ensure that local funding would be provided to continue the PFC Program.

CONCLUSION

The Partnerships for Change (PFC) Program impacted participating libraries and their participants in many ways. Libraries began to view their communities differently. They engaged in ongoing needs assessment and designed future programs and services based on the data collected. They committed real dollars to non-English-language collection development, outreach, and hiring bilingual staff. They actively engaged in outreach activities with positive results for both the targeted community and the non-targeted community. In varying degrees, they became involved in the community and involved the community in the library to redesign services and programs. They developed new partnerships with community people and organizations and benefited as new library advocates emerged. They became centers of community activity and gained the respect and support of political leaders. Many PFC libraries became the most dynamic, exciting branches in their library jurisdictions.

BUT MOST OF ALL, PARTICIPANTS, ESPECIALLY LIBRARY STAFF, CHANGED AS PEOPLE.

Many PFC participants emerged as leaders within the library profession and within their community. The program also impacted PFC participants predictably, and in ways that no one imagined. As expected, PFC participants acquired new skills, experience and confidence. They demonstrated talents for outreach, public relations, planning, evaluation, building community linkages, and valuing diversity. They began to see their library service areas and their communities with new eyes, and responded with their newly acquired skills.

Library systems changed as well. In some cases, expanding non-English collections led to opportunities where libraries could carefully plan for the development and maintenance of core international language collections. In other libraries, staff were able to bring attention and support to other language needs throughout the system. Within this change mode, PFC libraries often focused upon improving facilities and creating an infrastructure to support technology as a tool. Some participants were able to incorporate PFC philosophy into their systemwide strategic planning and multiyear goals and objectives.

But most of all, participants, especially library staff, changed as people. They became advocates for serving their entire communities. They learned to tackle bureaucratic challenges, and defend their programs against budget cuts. They became advocates for the PFC philosophy, believing that it had become part of who they were as librarians and people. As one participant noted in the 1999 PFC Participant Survey,

> *"I became more outgoing, more comfortable speaking in front of larger and larger groups of people. I incorporated the PFC principles in all the new library programs and grant applications I developed. PFC changed my philosophy of library service FOREVER."*

Another participant noted,

> *"Now I have the methods and skills to go with my commitment, e.g., community-based needs assessment, and an understanding of concepts such as 'vision' and 'stake holders.' I'm also much more politically savvy and the PFC principles are now an integral part of me and how I do all of my work."*

Noted another,

> *"PFC rekindled my belief in the library as an important tool for building democracy in the community and helping immigrants succeed in a new life."*

And another added,

> *"I became a better, more open-minded librarian."*

Achieving success with the PFC philosophy and principles is not easy. Changing traditions, institutions, bureaucracies, and people are formidable tasks, resisted by many. But the rewards of your efforts will illustrate what is best about libraries and librarians. By expanding their clientele, libraries assure their place in the community as vital institutions.

BIBLIOGRAPHY

CULTURAL AWARENESS

Berger, P. L. & R. J. Neuhaus. *To empower people: from state to civil society.* Washington D. C.: The American Enterprise Institute Press, 1996.

A revised edition of *To Empower People* (1977)–which was a 45-page pamphlet–supplemented with 11 new essays illustrating how the ideas have spread, rooted, and branched during the past 20 years. The heart of the authors' argument is that family, neighborhood, church, voluntary associations, and civic organizations are crucial institutions, whose weakening spells disaster.

Brislin, R. W. *Culture learning: concepts, applications, and research.* (An East-West Center Bk) Ann Arbor, MI: Books on Demand, 1987.

Fowler, S. M., & M. G. Mumford. *Intercultural sourcebook, vol 2: cross-cultural training methods.* Yarmouth, ME: Intercultural Press, Inc., 1999.

Comprehensive in scope, this book examines the principal methods of cross-cultural training, and specialized techniques and instructional devices. Six methods are examined in 20 articles: role plays, contrast-culture training, simulation games, critical incidents, the culture assimilator, and case studies. *Intercultural Sourcebook* provides both a framework for conceptualizing the training methods and guidelines for applying them.

Seidman, E. & J. Rappaport. *Redefining social problems.* New York: Plenum Publishing Corporation, 1986.

PLANNING

Barry, B. *Strategic planning workbook for nonprofit organizations.* 2nd Edition. St. Paul, MN: Amherst H. Wilder Foundation, 1997.

Strategic Planning Workbook, now revised and updated, helps you solve organizational problems with a coordinated approach, build teamwork and improve communication, increase investment in your organization, survive and thrive with fewer resources, stimulate forward thinking, and refocus your mission.

Brager, G. & H. Specht. *Community organizing.* New York: Columbia University Press, 1993.

This book discusses how individuals, groups, and organizations develop the means to deal with problems in their interaction with institutions, exploring methods and practices to address various issues.

Brody, R. *Problem solving: concepts & methods for community organizations.* New York: Human Sciences Press, Inc., 1985.

Hardy, J. M. *Managing for impact in nonprofit organizations.* Erwin, TN: Essex Press, 1994.

Public Library Association. *Planning for results: a public library transformation process.* Chicago: American Library Association, 1998.

PLA's new planning guide provides a unique, results-driven program that empowers librarians to meet community needs and develop strategies to anticipate future demands. Includes all the essential tools for library planning–rethinking existing roles in the community, evaluating opportunities, and developing the right service responses. The planning process enables librarians to envision, evaluate, and respond to community needs with distinctive programs and services.

York, R. O. *Human service planning: concepts, tools, and methods.* Chapel Hill, NC: The University of North Carolina Press, 1994.

Designed to make the social service decision-making process rational and practicable. It presents valuable guidelines for planning that enables the manager to select an approach that will be cost-efficient. It promotes a healthy skepticism about idealistic planning programs that cost more than their results can justify.

EVALUATION

Fink, A. & J. Kosecoff. *An evaluation primer.* Newbury Park, CA: Sage, 1978. (OP)

Franklin, J. L. & J. H. Thrasher. *An introduction to program evaluation.* New York: John Wiley and Sons, 1976.

Herman, J. L., L. L. Morris, & C. T. Fitz-Gibbon. *Evaluator's handbook.* Newbury Park, CA: Sage, 1987.

Lancaster, F. W. *If you want to evaluate your library.* University of Illinois Graduate School of Library and Information Services, 1993.

This revision of the 1988 edition is substantially expanded and strengthened. The focus is on public service provided by libraries and information centers, and the practicalities of selecting appropriate evaluation procedures.

Sichel, J. L. *Program evaluation guidelines.* New York: Human Sciences Press, 1982.

MANAGING CHANGE

Childers, T. M. and N. A. Van House. *What's good?: describing your public library's effectiveness.* Chicago: American Library Association, 1993.

Defines goodness as the success and quality of a library's performance. Offers a framework for assessment and strategies for communicating that assessment based on the findings of the Public Library Effectiveness Study. Contains a good overview of planning and measuring tools in public libraries since 1970.

Cram, L. *"The marketing audit: baseline for action."* Library Trends 43 (winter 1995):326-348.

Defines a marketing audit as a procedure that assesses client needs and community patterns while examining internal factors. Good explanation of a SWOT analysis that presents the internal strengths,weaknesses, external opportunities and threats in order to facilitate proactive planning. Includes brief descriptions of brainstorming, scenario building, and focus groups.

Harrington, H. and J. S. Harrington. *High performance benchmarking: 20 steps to success.* New York: McGraw-Hill, 1996.

An approachable, highly enthusiastic introduction to benchmarking. Includes a helpful chapter on data collection and analysis, and identifies 30 critical success factors.

Jacob, M. E. L. *Strategic planning: a how-to-do-it manual for librarians.* New York: Neal-Schuman, 1990.

A hands-on manual for smaller academic, public, and special libraries. Contains practical information and numerous forms and checklists. Includes especially useful chapters on environmental scanning and scenario development.

McClure, C. R., A. Owen, D. L. Zweizig, et al. *Planning and role setting for public libraries: a manual of options and procedures.* Chicago: American Library Association, 1987.

Intended primarily for small- and medium-sized libraries, regional systems, and state library agencies involved in public library development, this step-by-step planning manual introduced the concept of roles for public libraries. Steps of the planning process are described. Includes many workforms to assist library planners in collecting and analyzing information.

Quinlivan-Hall, D. and P. Renner. *In search of solutions: sixty ways to guide your problem-solving group.* San Diego, CA: Pfeiffer, 1994.

Written by training consultants, this book gives good advice for the group facilitator in making and keeping a work group, such as a planning committee, productive. Outlines 60 ways to help a group solve problems, for example, clarify issues, generate ideas, make decisions, and draw up action plans. Identifies questions the facilitator should ask in order to move the group beyond a bottleneck in discussions.

Schwartz, P. *The art of the long view.* New York: Doubleday, 1991.

This guide defines scenarios as stories about the way the world might turn out tomorrow, stories that can help us recognize and adapt to changing aspects of our present environment.

Scott, C., D. T. Jaffe, and G. R. Tobe. *Organizational vision, values, and mission.* Menlo Park, CA: Crisp Publications, 1993.

Defines visioning as picturing excellence and identifies a five-step process: clarify values, scan the current situation, define the mission, create a vision, and implement the vision. Self-study format with checklists and workforms may be helpful in structuring the discussions for creating the library vision statement.

Walter, V. A. *Output measures and more: planning and evaluating public library services for young adults.* Chicago: American Library Association, 1995.

Based on *Planning and Role Setting for Public Libraries* and intended to help librarians and library administrators understand, rationalize, and improve their services to a target group of young adult customers. Has refined and expanded ouput measures to 19 measures. Also introduces vision statement and provides sample interview and focus group questions for use with young adults. Extensive forms and sources for additional information.

Wheeler, K. M., ed. *Effective communications: a local government guide.* Washington, D. C.: International City/County Management Association, 1994.

Good overview of communication as a responsibility of administrators within local government. Practical advice on succeeding both within local government and within the community. Encourages public involvement and communication planning. Helpful chapters on communicating with elected officials, working with news media, making effective presentations, and designing publications.

Zweizig, D., D. W. Johnson, J. Robbins, et al. *The tell it! manual: the complete program for evaluating library performance.* Chicago: American Library Association, 1996.

Practical guidance on building ongoing evaluation into planning and managing library services. Part 1 provides a framework for planning and evaluation. Part 2 focuses on designing evaluation training. Part 3 covers evaluation methods and training materials. A helpful evaluation bibliography completes the publication.

NEEDS ASSESSMENT AND EVALUATION

Brody, R. *Problem solving: concepts and methods for organizations.* New York, NY: Human Sciences Press, Inc., 1982.

Cox F. M. , J. L.Erlich, J. Rothman, & J.E. Tropman. *Tactics and techniques of community practice.* 3rd Edition. Itasca, Il: F. E. Peacock Publishers, Inc., 1995.

Dervin, B. & K. Clark. *ASQ: asking significant questions: alternative tools for information need and accountability assessments by libraries.* Belmont, CA: Peninsula Library System, 1987.

Kimmel, W. A. "Needs Assessment: A Critical Perpective." R. M. Kramer, & H. Specht. *Readings in community organization practice.* 3rd Edition. Englewood Cliffs, NJ: Prentice-Hall Inc., 1983. (OP)

Payne, J. *Public libraries face California's ethnic and racial diversity.* Santa Monica, CA: Rand Publications, 1988.

Warren, R. B. & D. I. Warren. *The neighborhood organizer's handbook.* Notre Dame, IN: The University of Notre Dame Press, 1990.

This handbook addresses neighborhoods in the context of the contemporary urban scene and metropolitan complexes.

COMMUNITY LINKAGES/RESOURCE DEVELOPMENT REFERENCES

Brager, G. and H. Specht. *Community organizing.* New York: Columbia University Press, 1993. See annotation under "Managing Change".

Espry, S. N. "Are You in Step with Your Community's Needs?" in *Nonprofit World*, 7(2) March/April 1989.

Kahn, S. *Organizing: a guide for grassroots leaders.* New York: National Assn. Of Social Workers, 1999.
A dynamic guide on how to unite people for change and to help people work together to get things done. It describes how to influence power structures, how to become successful organizers and fundraisers, and how to effect social change through grassroots organization and mobilization.

PUBLIC RELATIONS

Bayan, R. *Words that sell.* New York: NTC Publishing Group, 1987.
The ultimate thesaurus to help you promote your products.

Bingham, N. *How to do leaflets, newsletters and newspapers.* 2nd Edition. Boston, MA: PEP Publishers, 1991.

Broom, G. M. & D. M. Dozier. *Using research in public relations.* Englewood Cliffs, NJ: Prentice-Hall, 1990.

Chase, W. D. *Chase's calendar of annual events: special days, weeks, and months in 19XX.* Chicago, IL: Best Publications, 1999; published annually.

Davidson, J. P. *Marketing on a shoestring.* 2nd Edition. New York: John Wiley & Sons, 1994.
A classic in its field, offering hundreds of ideas within 12 broad-based strategies you can implement today. Aids you in making every marketing dollar count. Recommended by the Library Journal, Learning Network, and American Demographics.

Kies, C. N. *Marketing and public relations for libraries.* Metuchen, NJ: Scarecrow Press, 1987.

Kotter, P. *Strategic marketing for non-profit organizations.* 5th Edition. New York: Simon & Schuster Trade, 1995.

Mandel, S. *Effective presentation skills.* 2nd Edition. Los Altos, CA: Crisp Publications,1999.
Helps reader prepare and deliver effective presentations.

Phillips, M. & S. Rasberry. *Marketing without advertising.* 2nd Edition. Berkeley, CA: Nolo Press, 1996.
This book provides practical advice on how to attract new customers, satisfy the regulars, and turn dissatisfied one-timers into loyal supporters.

Salzman, J. *Making the news.* Boulder, CO: Westview Press, 1998.
A very comphrehensive and useful how-to guide that helps the activist make the most of organizing through the media.

Tuggle, A. M. *Grand schemes and nitty-gritty details: library pr that works.* Littleton, CO: Libraries Unlimited, 1987.

Wood, E. J. *Strategic marketing for libraries.* New York, NY: Greenwood Publishing Group, Inc., 1988.
This text gives a straightforward discussion of the full range of marketing concepts and tools applied to various types of libraries including public, special, and academic.

Weingand, D. E. *Marketing/planning for library and information services.* 2nd Edition. Littleton, CO: Libraries Unlimited, 1999.

APPENDIX A

Partnerships for Change Trainers, Guest Trainers and Consultants

Adolfo Aguilar, Jr.
Chris Browne
Roxanne Burgess
Herbert L. Carter, Ph.D.
J. Manual Casas, Ph.D.
Richard Cervantes, Ph.D.
Wayne D. Cook
Beth L. Cornell
Cheryl Cromwell
Ray Durazo
Dierdre Francis-Dickerson
Robert Charles Gallegos
Rafael Gonzalez
Robin Hardy
Phyllis Jordan
Thomas M. Kasten
Shelly G. Keller
Phyllis Kochavi
Alan K. Kumamoto
Joanne Kumamoto
Lydia Lopez
Morgan Lyons
Jym Marquez
Craig Martinez
Elissa Maas
Jacqueline Miyauchi
George I. Monsivais
Alex J. Norman, D.S.W.
Michael Rubin
Rhea Joyce Rubin
Cheryl Stecher
Carole Copeland Thomas
Jill Thompson
Victor Wong
Nolan Zane, Ph.D.

APPENDIX B

Partnerships for Change Libraries and Participants

Cycle I Libraries (1989-1992)

In parentheses after each name: "A" denotes A partner; "AA" denotes Library Director; "B"denotes B partner; and "C" denotes C partner. All participants of record are listed.

Contra Costa County Library, Pinole Branch
Rose-Marie Kennedy (A)
Anne Marie Gold (AA)
Sara Loyster (B)
Eduardo Manuel (C)

Fresno County Library, Auberry Branch
Karen Bosch Cobb (A)
Anne Neal (B)
Iliene Cape (C)
Thane V. Baty (C)
Geraldine Alec (C)

Fullerton Public Library, Main Library
Carolyn Johnson (A)
Albert J. Milo (A)
Carolyn Eckert (B)
Anita Varela (C)
John Ramirez (C)
Rosa Maria Gómez Amaro (C)

Long Beach Public Library, Mark Twain Branch
Nancy Messineo (A)
Doris Soriano (AA)
Mary Hopman (B)
Seng Kan (C)
Kunavouth Svay (C)

Los Angeles Public Library, Echo Park Branch
Sonja Williams (A)
Juliana Cheng (A)
Carmen Martinez (AA)
Sylvia A. Galan (B)
Juanita Dellomes (C)
Emma Palma (C)

Los Angeles Public Library, Pio Pico Koreatown Branch
Jennifer Lambelet (A)
Barbara Clark (A)
Jae Min Roh (B)
Bong Hwan Kim (C)
Debbi Choi (C)
Marcia Choo (C)

Los Angeles Public Library, Watts Branch
Charlotte Jackson (A)
Norma Anders (B)
Jean Carpenter (C)

Mendocino County Library, Covelo Branch
Henry Bates (A)
Mary Luther (B)
Donna Kerr (B)
Glenda Britton (C)

Monterey County Library, Soledad Community Library
Steven Silveria (A)
Rita Yribar (A)
Dallas Shaffer (AA)
Angie Lopez (B)
Vicky Arroyo (C)
Mona Ozuna (C)
Vicky Lopez (C)
Mercedes Galvan (C)
Patricia Moralés (C)

Oceanside Public Library, Main Library
Helen Nelson (A)
Carola Naegele (A)
Pat Morse (B)
Grace Francisco (B)
Barbara Bale (C)
Erendira Abel (C)

Orange Public Library, Main Library
Karen Leo (A)
Joyce Melbinger (A)
Yolando Moreno (A)
Cindy Mediavilla (A)
Kerry Stern (B)
Aileen Angel (B)
Anthony Garcia (B)
Mary Garcia (C)
Teresa Smith (C)

Riverside City County Library, Desert Regional
Barbara Bowie (A)
Judith Auth (AA)
Miguel Guitron-Rodriguez (B)
Elia Gentry (B)
Sofia Chavarria (C)

San Benito County Free Library
Jo Barrios Wahdan (A)
Lupe Rodriguez (B)
Lourdes Langford (C)
Raul Medina (C)

San Diego Public Library, Linda Vista Branch
Francisco Pinneli (A)
Alyce J. Archuleta (A)
Anna Martinez (AA)
Philip Detwiler (B)
J. Richard Belanger, Ph.D. (B)
Maria Martinez (C)
Hung Luu (C)
Philip Tuan Anh Nguyen (C)

San Diego Public Library, Logan Heights Branch
Angela Yang (A)
Margaret Kazmar (A)
Judith Castiano (A)
Juan Ortiz (B)
Pedro Moreno (C)

San Francisco Public Library, Mission Branch
Neel Parikh (A)
Hope Hayes (A)
Steven Cady (B)
Humberto Melara (C)
Tede Matthews (C)

San Jose Public Library, American Indian Center
Patricia Curia (A)
Sara Scribner (AA)
Rita Torres (B)
Larry Barryhill (C)
John Ammon (C)
Winona Sample (C)

Santa Ana Public Library, Newhope Branch
Martha Garcia Almarzouk (A)
Robert Richard (AA)
Donna Minick (B)
Son Kim Vo, Ph.D. (C)

Cycle II Libraries (1990-1995)

Alameda County, Union City Branch
Helen Dunbar (A)
Linda M. Wood (AA)
Linda Harris (B)
Enriquetta Camacho (C)

Berkeley Public Library, South Branch
Regina U. Minudri (A)
Mae Bolton (A)
Patty Wong (B)
Margrethe Kleiber (C)
Julia Matsui Estrella (C)
Anh Tran (C)

Carlsbad City Library, Centro de Informacion
Geoffrey Armour (A)
Cliff Lange (AA)
Lynda L. Jones (B)
Sister Rosa Hernandez (C)
Odelia E. Escobedo (C)

Kern County Library, Lamont Branch
Kristie Coons (A)
Diane Duquette (AA)
Doris Weddell (B)
Lupe Adame (B)
Adrienne Herd (C)
Linda Borunda (C)

Los Angeles Public Library, Central Library
M. Janine Goodale (A)
Barbara H. Clark (A)
Joan Bartel (A)
Elizabeth Gay Teoman (AA)
Rolando Pasquinelli (B)
Sylva N. Manoogian (B)
Sandy Schuckett (C)

Stockton-San Joaquin County Public Library, Southeast Library
Harriet Mador (A)
Kenneth A. Yamashita, Ph.D. (A)
Gayle Cole (A)
Charles Teval (B)
Rosie D'Arcy (C)
Mario Rubio (C)
Martha Villarreal-Ocampo (C)

Sunnyvale Public Library, Main Library
Susan Denniston (A)
Marian Hartshorn (B)
Leticia Montalvo (C)

Whittier Public Library, Central Library
Margaret Donnellan (A and AA)
Bonnie Weber (B and A)
Ivonne Arreola (B)
Sylvia Saenz (C)
Marlene Mendez Martel (C)
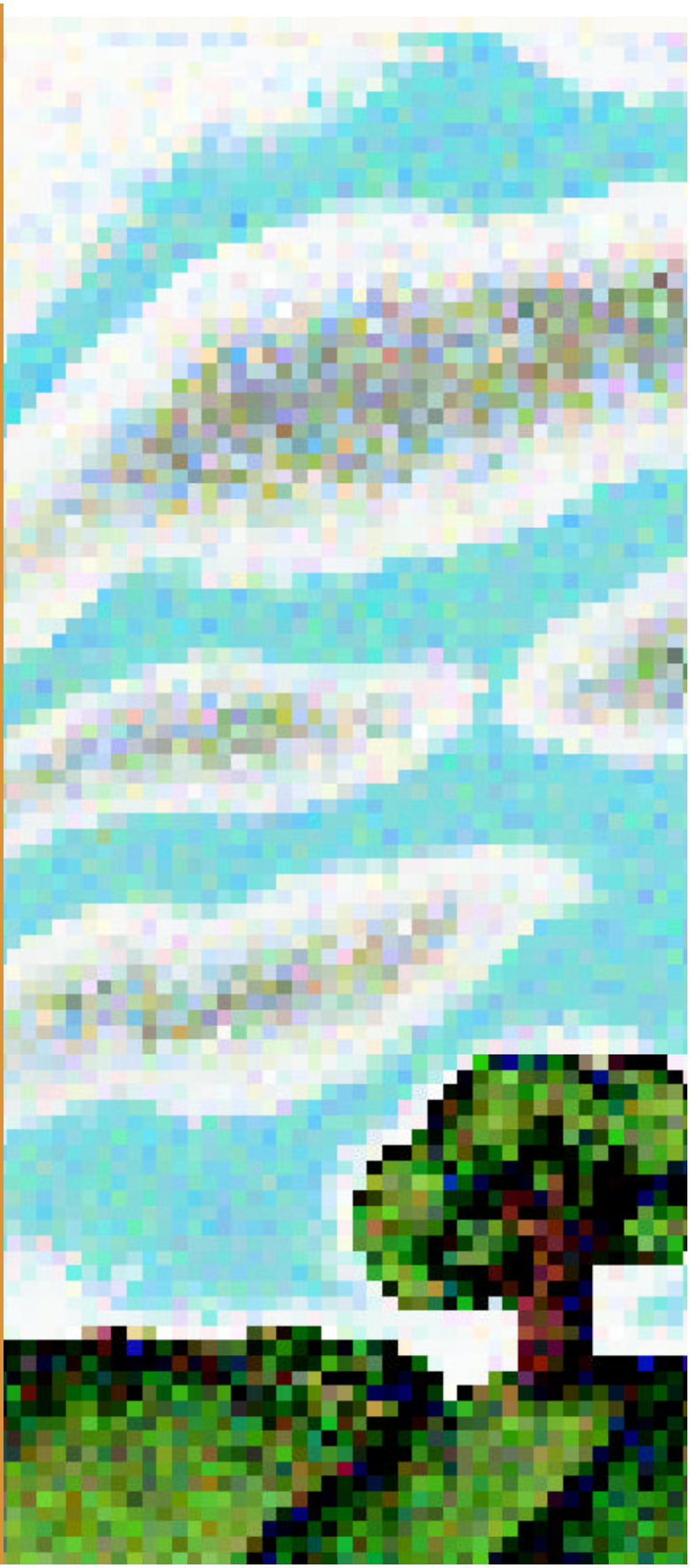
This publication was supported in whole or in part by the U.S. Institute of Museum and Library Services under the provisions of the Library Services and Technology Act, administered in California by the State Librarian. However, the opinions expressed herein do not necessarily reflect the position or policy of the U.S. Institute of Museum and Library Services or the California State Library, and no endorsement by the U.S. Institute of Museum and Library Services or the California State Library should be inferred.